ATTACHMENT A

Site Plan Revisions

05-04-2020

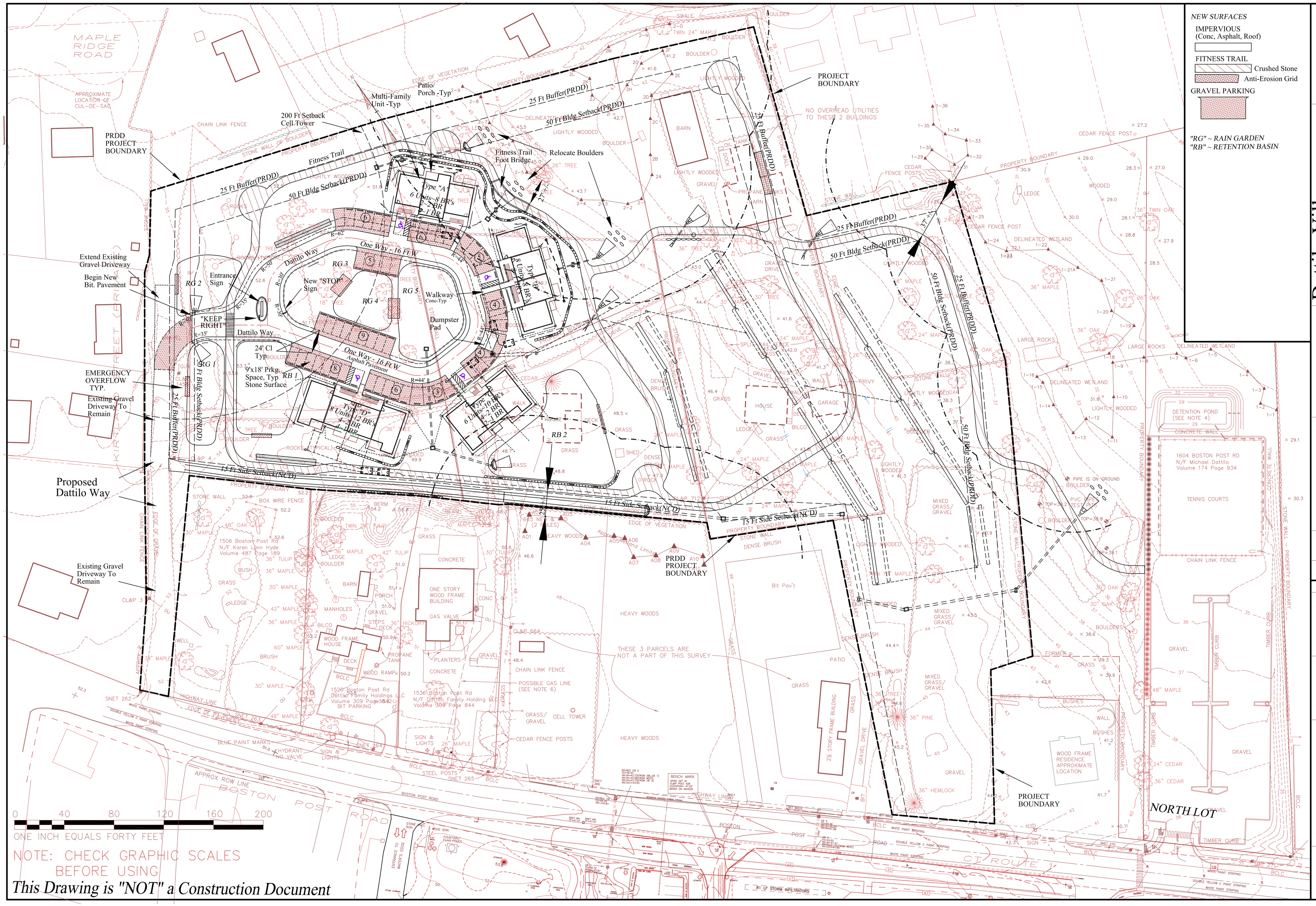

Dattilo Village Proposed Site Layout Plan

SCALE: 1"=40'
DRWG. NO.:
PROJ. NO.:
DATE: Oct. 28, 2019

NO.	DATE	DESCRIPTION
1	05-04-2020	Revisions per Town Comments

REVISIONS

THIS PLAN IS NOT VALID WITHOUT A LIVE SIGNATURE AND SEAL.

A-L Consulting, LLC
P.O. BOX 863
ESSEX, CONNECTICUT
PLANNING / ENGINEERING

C-2

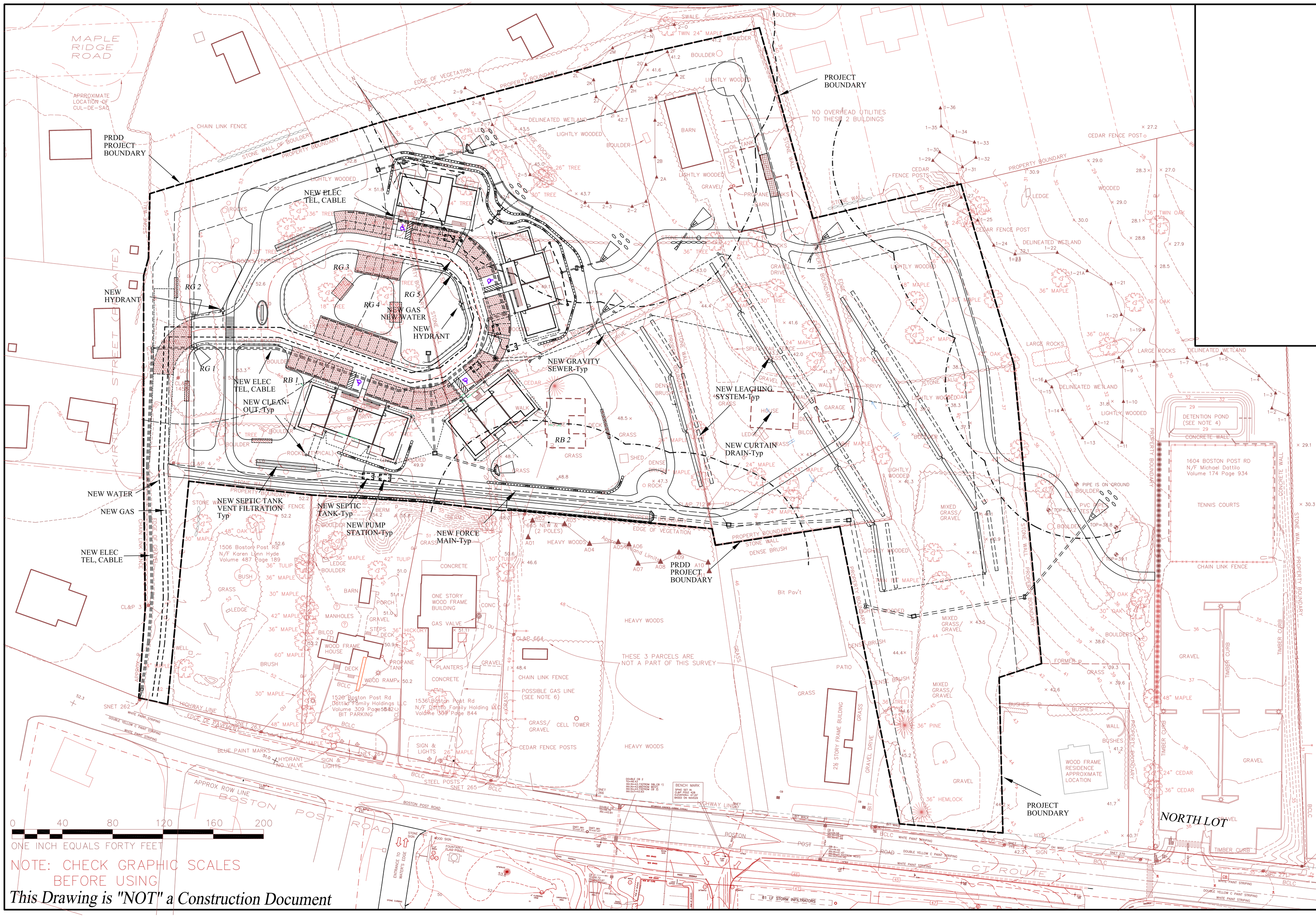

NOTE: CHECK GRAPHIC SCALES BEFORE USING

This Drawing is "NOT" a Construction Document

Dattilo Village
Proposed Utilities Service Plan

SCALE: 1"=40'
DRWG. NO.:
PROJ. NO.:
DATE: Oct. 28, 2019

REVISIONS

NO.	DATE	DESCRIPTION
1	05-04-2020	Revisions per Town Comments

THIS PLAN IS NOT VALID WITHOUT A LIVE SIGNATURE AND SEAL.

A-L Consulting, LLC
P.O. BOX 863
ESSEX, CONNECTICUT
PLANNING / ENGINEERING

C-3

TYPE OF PIPE

NON-LOAD BEARING RCP TO BE CLASS 3
LOAD BEARING RCP TO BE CLASS 5
NON-LOAD BEARING PVC TO BE ASTM 3034, SDR 35
LOAD BEARING PVC TO BE ASTM 3034, SDR 24

DRAINAGE SYSTEM IMROVEMENTS

CB 1 TF 51.9	
INV OUT 49.5 12" PVC SE	SDR 35
MH 1 TF 54.0	
INV IN 48.5 12" PVC SW	SDR 35
INV IN 52.0 6" PVC SE	SDR 35
INV OUT 48.5 15" PVC SE	SDR 24
CB 2 TF 53.8	
INV OUT 48.0 8" PVC NE	SDR 35
MH 2 TF 51.5	
INV IN 47.0 8" PVC SE	SDR 35
INV OUT 47.0 8" PVC NE	SDR 35
YD 1 TF 53.4	
INV OUT 46.5 10" PVC E	SDR 35
MH 3 TF 49.8	
INV IN 46.0 10" PVC W	SDR 35
INV OUT 46.1 10" PVC E	SDR 24
CB 3 TF 52.5	
INV OUT 50.5 15" PVC S	SDR 24
CB 4 TF 52.8	
INV IN 50.2 15" PVC N	SDR 24
INV OUT 50.2 18" PVC SE	SDR 35
P-9 8" PVC	SDR 24
INV UP 48.0 DWN 47.0	
P-10 10" PVC	SDR 24
INV UP 43.0 DWN 42.5	
P-11 10" PVC	SDR 24
INV UP 39.5 DWN 39.0	
CB 5 TF 46.3	
INV IN 43.0 12" PVC W	SDR 35
INV OUT 43.0 15" PVC E	SDR 35
CB 6 TF 43.5	
INV IN 40.7 15" PVC W	SDR 35
INV OUT 40.7 18" PVC S	SDR 35
MH 4 TF 44.2	
INV IN 39.1 18" PVC N	SDR 35
INV OUT 39.1 24" PVC SE	SDR 35
CB 7 TF 42.0	
INV IN 38.2 24" PVC NW	SDR 35
INV OUT 38.2 24" PVC SE	SDR 35
MH 5 TF 39.5	
INV IN 36.1 24" PVC NW	SDR 35
INV OUT 36.1 24" PVC SE	SDR 35

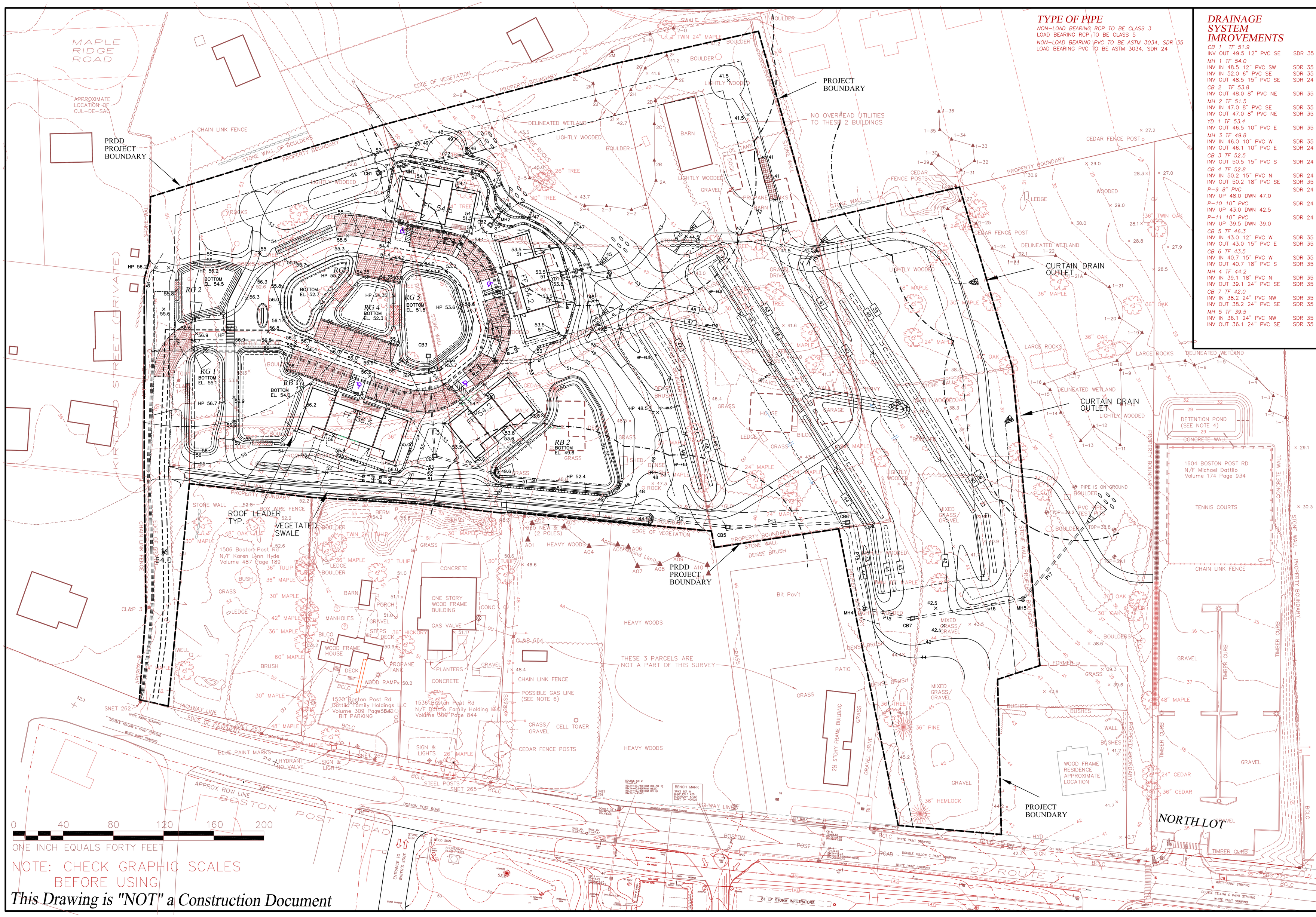

0 40 80 120 160 200

ONE INCH EQUALS FORTY FEET

NOTE: CHECK GRAPHIC SCALES BEFORE USING

This Drawing is "NOT" a Construction Document

Dattilo Village Proposed Drainage, Grading Plan

SCALE: 1"=40'
DRWG. NO.:
PROJ. NO.:
DATE: Oct. 28, 2019

REVISIONS

NO.	DATE	DESCRIPTION
1	05-04-2020	Revisions per Town Comments

THIS PLAN IS NOT VALID WITHOUT A LIVE SIGNATURE AND SEAL.

A-L Consultng, LLC
P.O. BOX 863
ESSEX, CONNECTICUT
PLANNING / ENGINEERING

C-4

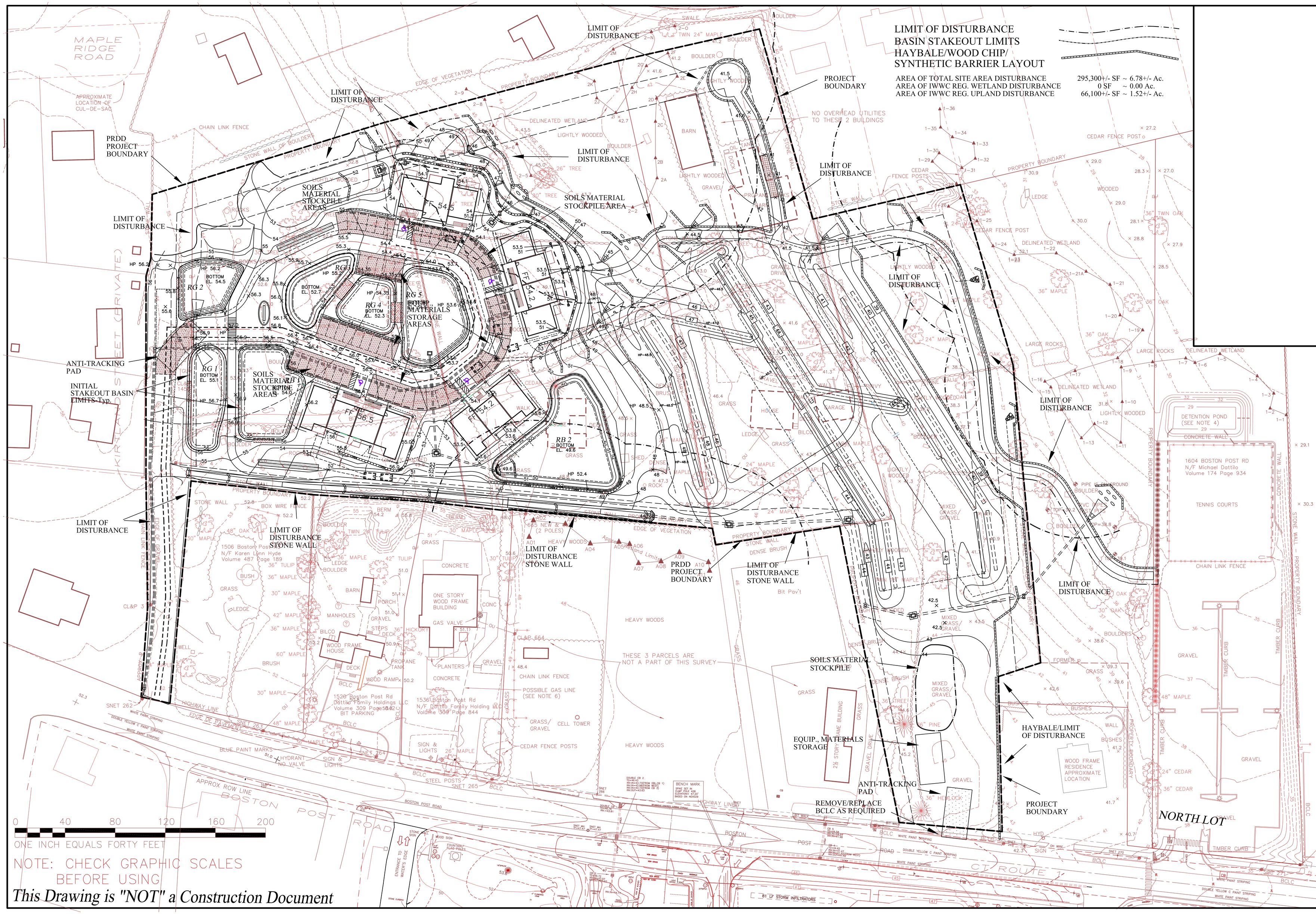

This Drawing is "NOT" a Construction Document

Dattilo Village
Proposed Erosion, Sedimentation Control Plan

SCALE: 1"=40'
DRWG. NO.:
PROJ. NO.:
DATE: Oct. 28, 2019

NO.	DATE	DESCRIPTION
1	05-04-2020	Revisions per Town Comments

REVISIONS

THIS PLAN IS NOT VALID WITHOUT A LIVE SIGNATURE AND SEAL.

A-L Consultng, LLC
P.O. BOX 863
ESSEX, CONNECTICUT
PLANNING / ENGINEERING

C-5

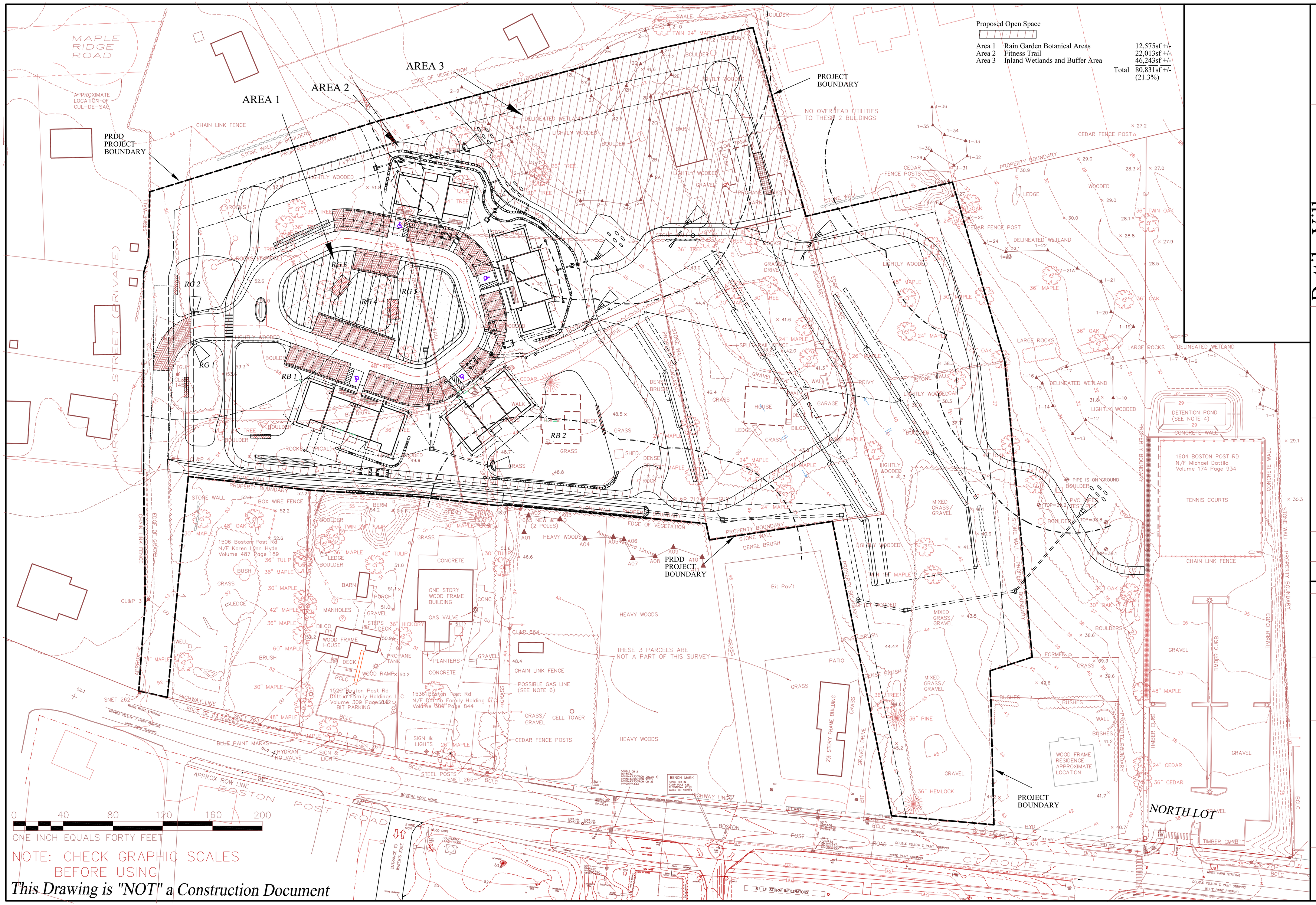

This Drawing is "NOT" a Construction Document

Dattilo Village
Proposed Open Space/ Recreation Plan

SCALE: 1"=40'
DRWG. NO.:
PROJ. NO.:
DATE: Oct. 28, 2019

REVISIONS

NO.	DATE	DESCRIPTION
1	05-04-2020	Revisions per Town Comments

THIS PLAN IS NOT VALID WITHOUT A LIVE SIGNATURE AND SEAL.

A-L Consultng, LLC
P.O. BOX 863
ESSEX, CONNECTICUT
PLANNING / ENGINEERING

C-6

EROSION CONTROL NARRATIVE

GENERAL

THE PROJECT CONSISTS OF THE FOLLOWING ACTIVITIES:
DEMOLISH OF EXISTING STRUCTURES
CONSTRUCTION OF FOUR(4) MULTI-FAMILY RESIDENTIAL BLDGS.
EXPANSION OF THE ENTRANCE VESTIBULE AREA,
CONSTRUCTION OF AN ACCESS DRIVE AND PARKING AREAS
CONSTRUCTION OF A SSDS
CONSTRUCTION OF A STORMWATER MANAGEMENT SYSTEM
CONSTRUCTION OF ELECTRIC, GAS, WATER, CALBE UTILITY SERVICES

SEQUENCE OF CONSTRUCTION ACTIVITIES:

CONSTRUCTION SEQUENCE IS GENERALLY PROPOSED AS:
A PRE-CONSTRUCTION MEETING SHALL BE HELD WITH
TOWN STAFF PRIOR TO ANY WORK ON-SITE.
ESTABLISH LIMITS OF DISTURBANCE.
STAKEOUT EROSION AND SEDIMENT CONTROL MEASURES, DRAINAGE BASINS
DEMOLISH EXISTING BLDGS., RE-GRADE, RE-SEED DISTURBED AREAS
CONSTRUCTION OF SSDS
CONSTRUCTION OF ACCESS STREET AND PARKING AREAS
CONSTRUCTION OF DRAINAGE FACILITIES, UTILITY SERVICES
CONSTRUCTION OF MULTI-FAMILY BUILDINGS
CONSTRUCTION OF FITNESS TRAIL
FINAL ACCESS STREET PAVING
FINISH LANDSCAPING

OUTLINE OF CONSTRUCTION PROCEDURES

EROSION AND SEDIMENT CONTROL NOTES:

EROSION AND SEDIMENT CONTROL SEQUENCING:
THE LIMITS OF DISTURBANCE WILL BE STAKED IN ACCORDANCE WITH THE APPROVED EROSION AND SEDIMENTATION CONTROL PLAN.
STAKEOUT DETENTION BASIN STRUCTURE LIMITS
INSTALL HAY BALE EROSION BARRIERS AS PER APPROVED PLAN
INSTALL ANTI-TRACKS PADS AT CONSTRUCTION ENTRANCES.
EXCAVATE, ESTABLISH ACCESS. PARKING AND TEMORARY EQUIPMENT AND MATERIALS STORAGE AREAS.
INSTALL TEMPORARY PROTECTION FENCING AROUND SIGNIFICANT TREES TO BE SAVED.
CONTACT TOWN STAFF FOR INSPECTION OF E&S CONTROLS PRIOR TO START OF CONSTRUCTION
CONTRACTOR TO PROVIDE TEMPORARY STABILIZATION OF DISTURBED AREAS THAT ARE NOT UNDER ACTIVE CONSTRUCTION ACTIVITIES
CONTRACTOR TO INSPECT AND REPAIR E&S CONTROLS PRIOR TO AND AFTER RAIN EVENTS.
SITE CONTRACTOR TO STORE E&S REPLACEMENT MATERIALS ON-SITE IN ANTICIPATION OF EMERGENCY REPAIRS/REPLACEMENTS INCLUDING 10 HAYBALES, 150 LF SEDIMENT FENCE, 1 CB INLET FILTER FABRIC FILTER AND 5 CY OF CRUSHED STONE.

CONSTRUCTION OF ACCESS STREET, BUILDING PADS
REMOVE, STOCKPILE TOP SOIL.
INSPECT, RE-INSTALL HAYBALE PROTECTION, IF REQUIRED.
EXCAVATE, COMPACT PARKING AREA TO SUB-GRADE ELEVATION
EXCAVATE, INSTALL RETAINING WALL STRUCTURES FOR BUILDINGS USING EXISTING ROCK WALL MATERIALS TO BE REMOVED FOR CONSTRUCTION
CONSTRUCTION, ESTABLISH BUILDING PADS.
EXCAVATE, INSTALL DRAINAGE FACILITIES
EXCAVATE, INSTALL SANITARY, UTILITY SERVICES WITHIN ACCESS STREET AND WITHIN BUILDING PAD AREAS
PLACE AND COMPACT BASE MATERIAL TO FINAL GRADE.
INSTALL BASE COURSE PAVEMENT TO STABILIZE PARKING AREA,

MULTI-FAMILY UNIT CONSTRUCTION:
EXCAVATE, INSTALL BUILDING FOUNDATIONS
EXCAVATE, INSTALL RELATED BELOW GROUND DRAINAGE FACILITIES.
EXCAVATE, INSTALL RELATED SANITARY, UTLITY SERVICES.
CONSTRUCT BUILDING UNITS
CONNECT ROOF LEADERS TO DRAINAGE FACILITIES AS SOON AS GUTTER SYSTEM IS INSTALLED.
MAINTAIN DUMPSTERS ON-SITE FOR BUILDING MATERIAL REFUSE THROUGHOUT CONSTRUCTION. CLEAN-UP SITE PRIOR TO STOP OF WORK AT END OF EACH WORK DAY.

CONSTRUCTION OF SSDS
REMOVE, STOCKPILE TOP SOIL.
INSPECT, RE-INSTALL HAYBALE PROTECTION, IF REQUIRED.
EXCAVATE, INSTALL SSDS INACCORDANCE WITH THE PLANS APPROVED BY CtDPH
TOPSOIL, SEED FOR STABILIZATION

FINAL STABILIZATION
CONSTRUCT LANDSCAPE ISLAND AND INSTALL BITUMINOUS CURBING.
CLEANOUT, REMOVE SEDIMENTS WITHIN BASIN STRUCTURES ACCUMULATED DURING CONSTRUCTION. RE-SHAPE TO FINISH GRADES.
CLEANOUT OTHER DRAINAGE FACILITIES AS NEEDED.
INSTALL LANDSCAPING FEATURES PER PLANS
APPLY FINISH PAVING COURSE
FINE GRADE DISTURBED AREAS NOT COVERED BY L.A. PLANS. REMOVE EXCESS
APPLY MIN 4" TOPSOIL, PROPER SEED MIXTURE, FERTILIZER AND LIME IN ALL DISTURBED AREAS EXCEPT PROPOSE LANDSCAPED AREAS. FERTILIZER SHALL BE APPLIED AT A RATE OF 7.5 LBS PER 1,000 SF AND LIME AT A RATE OF 90 LBS PER 1,000 SF. SEED MIX SHALL BE AS FOLLOWS:
Kentucky Bluegrass.45 lbs. per 1,000 sf
Perennial Ryegrass .10 lbs. per 1,000 sf
Creeping Red Fescue .45 lbs. per 1,000 sf
SEEDING TO TAKE PLACE BETWEEN APRIL 1 THROUGH JUNE 1 OR AUGUST 15 THROUGH SEPTEMBER 1 OR AS APPROVED BY THE TOWNS DESIGNATED AGENT
APPLY STRAW/HAY OR JUTE NETTING OVER ALL SEEDED AREAS.
REMOVE ALL EROSION AND SEDIMENT CONTROLS WHEN ALL GRADED AREAS ARE PERMANENTLY STABILIZED.

IT SHALL BE THE RESPONSIBILITY OF THE OWNER(S) TO ENSURE PROPER IMPLEMENTATION OF THE EROSION AND SEDIMENT CONTROLS AS SHOWN ON THIS PLAN, INCLUDING INSTALLATION AND MAINTENANCE. THE OWNER(S) AGENT IS:

MR CLAUDIO MARASCO, OWNERS AGENT
860-399-3901

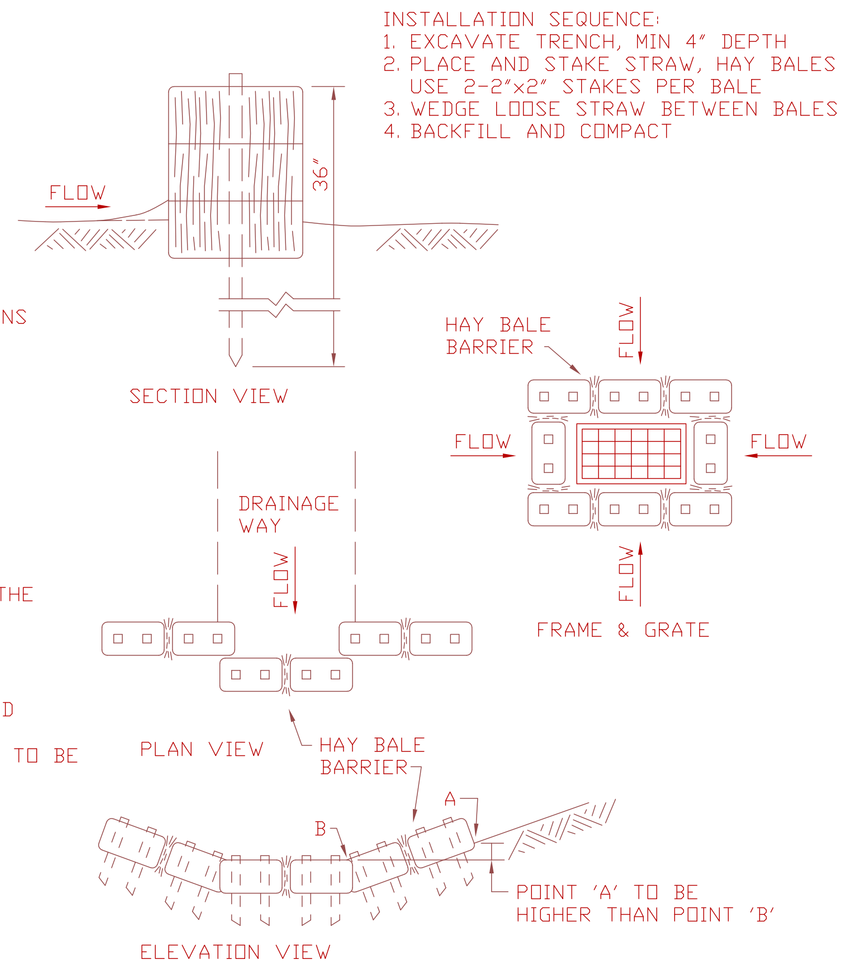

1 STRAW, HAYBALE BARRIER
NTS

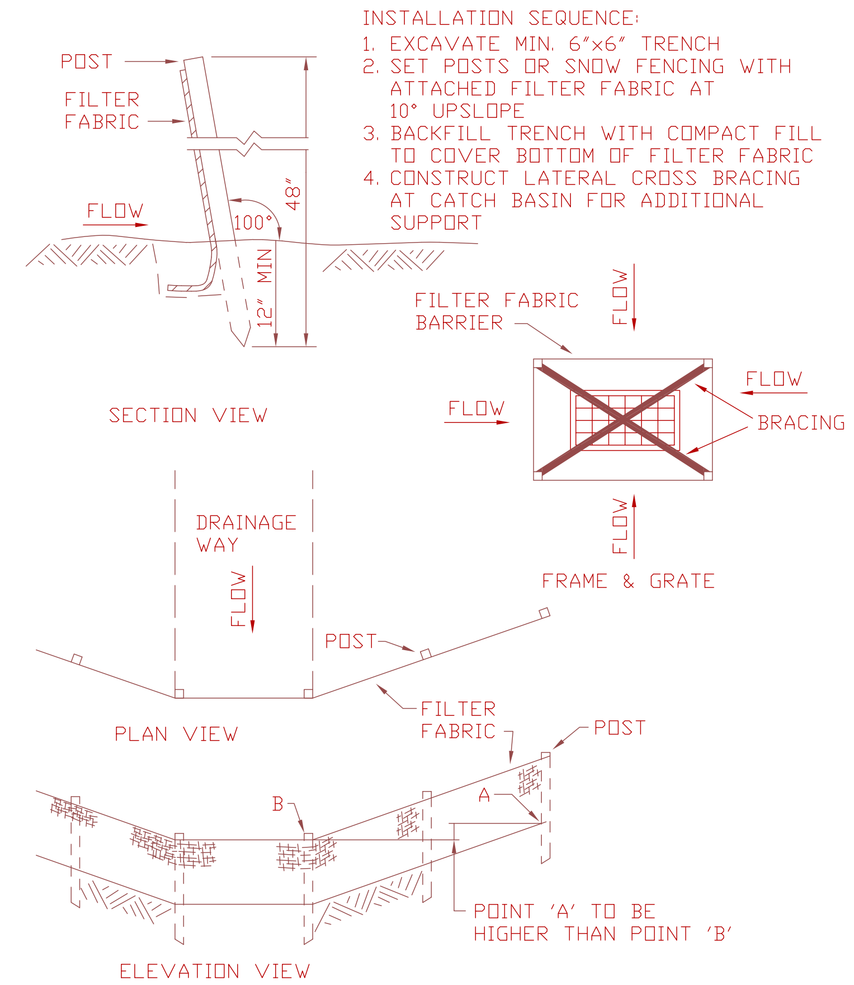

2 SEDIMENT FENCE - FILTER FABRIC BARRIER
NTS

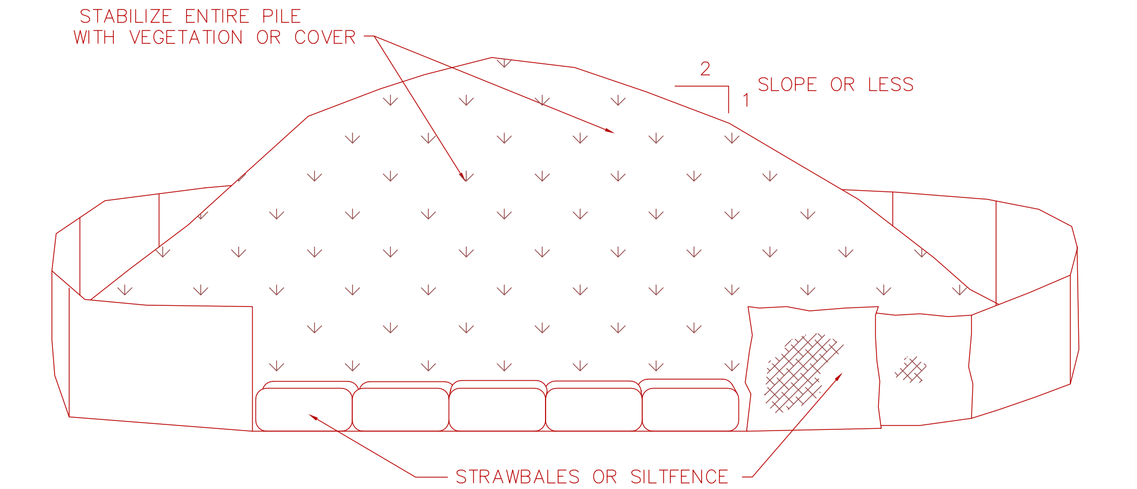

TEMPORARY STOCKPILE STABILIZATION MEASURES INCLUDE VEGETATIVE COVER, MULCH, NONVEGETATIVE COVER, AND PERIPHERAL SEDIMENT TRAPPING BARRIERS. THE STABILIZATION MEASURE(S) SELECTED SHOULD BE APPROPRIATE FOR THE TIME OF YEAR, SITE CONDITIONS, AND REQUIRED PERIOD OF USE.

1. AREA CHOSEN FOR STOCKPILING OPERATIONS SHALL BE DRY AND STABLE.
2. MAXIMUM SLOPE OF STOCKPILE SHALL BE 2:1.
3. UPON COMPLETION OF SOIL STOCKPILING, EACH PILE SHALL BE SURROUNDED WITH EITHER SILT FENCING OR STRAWBALES, THEN STABILIZED WITH VEGETATION OR COVERED.

3 SOIL STOCK PILE DETAIL
NTS

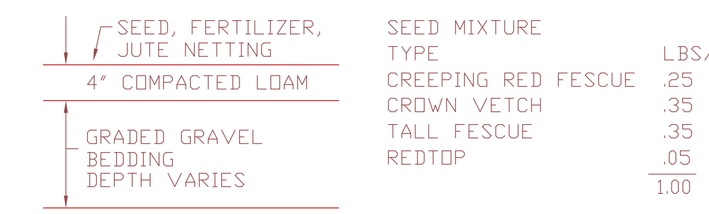

SEED MIXTURE TYPE	LBS/1000SF
CREEPING RED FESCUE	.25
CROWN VETCH	.35
TALL FESCUE	.35
REDTOP	.05
	1.00

4 LOAM AND SEEDING DETAIL
NTS

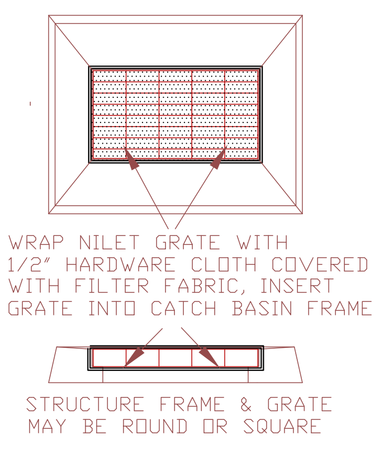

CATCH BASIN INSERT
1"=2'

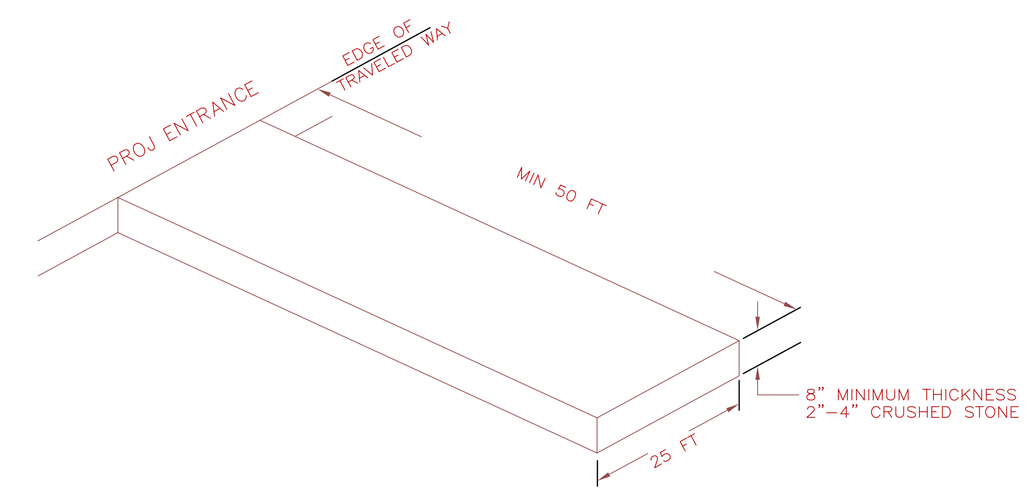

1. CLEAR AND GRUB AREA BEFORE PLACEMENT OF STONE. A GEOTEXTILE LAYER MAY BE USED TO STABILIZE POOR SUBGRADE SOILS.
2. PROVIDE FOR POSITIVE DRAINAGE OF SEDIMENT LADEN WATER THROUGH AN APPROVED SEDIMENT FILTER OR TO A SEDIMENT BASIN.
3. MAINTAIN ENTRANCE SO AS TO PREVENT TRACKING OR FLOWING OF SEDIMENT ONTO PUBLIC ROAD.
4. SHOULD SITE CONDITIONS BE SUCH THAT SOIL CANNOT BE REMOVED BY VEHICLES TRAVELING OVER THE PAD, THE TIRES OF VEHICLES MAY HAVE TO BE WASHED PRIOR TO VEHICLES ENTERING THE PUBLIC ROAD. ALL WASH WATER SHALL BE DIRECTED THROUGH AN APPROVED SEDIMENT FILTER OR TO A SEDIMENT BASIN.

5 CONSTRUCTION ENTRANCE ANTI-TRACKING PAD
NOT TO SCALE

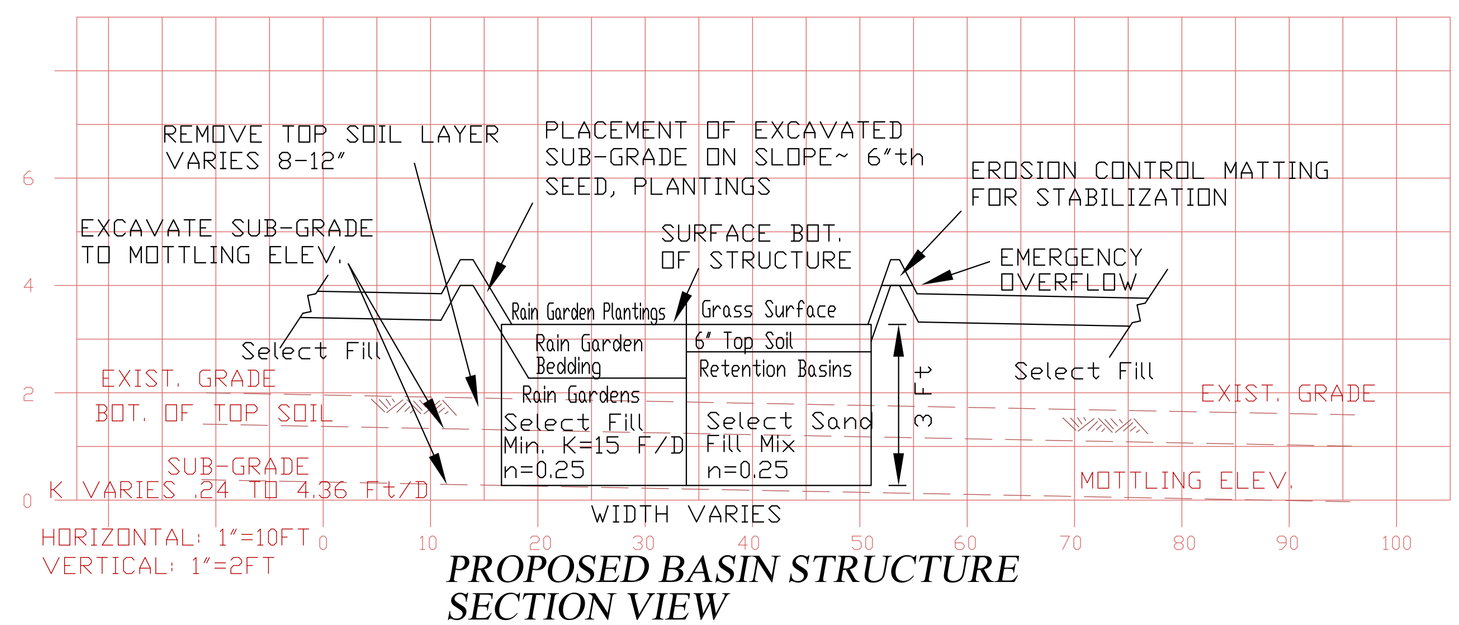

PROPOSED BASIN STRUCTURE SECTION VIEW

REVISIONS		
1	05-04-2020	Revisions per Town Comments
NO.	DATE	DESCRIPTION

LAND USE PERMIT APPLICATIONS
DATTILO VILLAGE
Westbrook, Ct.
EROSION AND SEDIMENT CONTROL NOTES & DETAILS

SCALE:
DRWG. NO.:
PROJ. NO.:
DATE: 10-29-19

THIS PLAN IS NOT VALID WITHOUT A LIVE SIGNATURE AND SEAL.

A-L CONSULTING, LLC
P.O. BOX 863
ESSEX, CONNECTICUT
PLANNING / ENGINEERING

C-7

This drawing is NOT a Construction Document

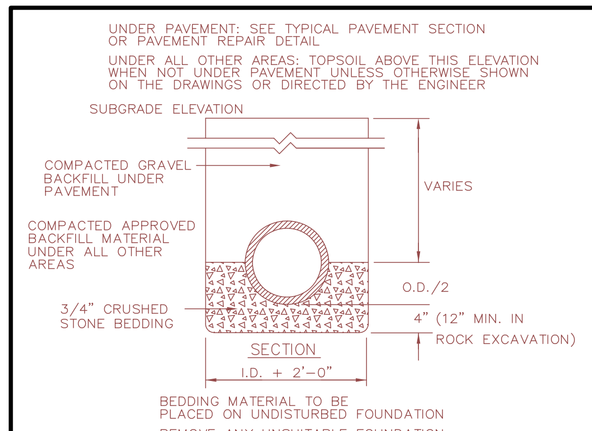

TYPE OF PIPE

NON-LOAD BEARING RCP TO BE CLASS 3
LOAD BEARING RCP TO BE CLASS 5
NON-LOAD BEARING PVC TO BE ASTM 3034, SDR 35
LOAD BEARING PVC TO BE ASTM 3034, SDR 24

DRAINAGE PIPE TRENCH

NOT TO SCALE

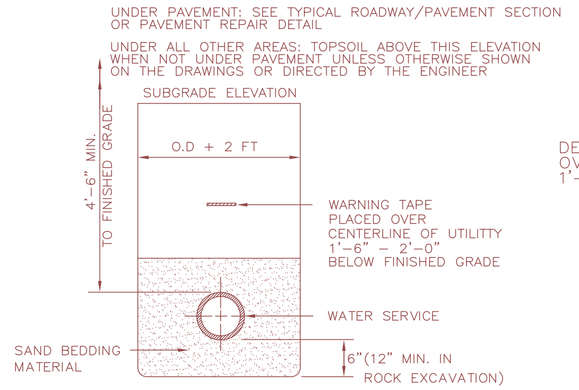

NOTES:

1. SAND BEDDING MATERIAL TO BE PLACED A MINIMUM OF 1'-0" OVER THE TOP OF WATER SERVICE.
2. BEDDING MATERIAL TO BE PLACED ON UNDISTURBED FOUNDATION.
3. REMOVE ANY UNSUITABLE FOUNDATION MATERIAL AND REPLACE WITH COMPACTED BEDDING MATERIAL.
4. COMPACTED GRAVEL BACKFILL UNDER PAVEMENT. COMPACTED APPROVED BACKFILL MATERIAL UNDER ALL OTHER AREAS.

WATER SERVICE TRENCH

NOT TO SCALE

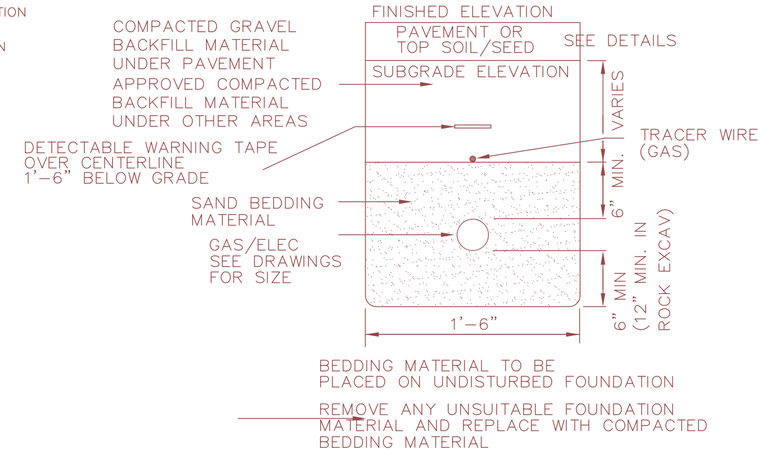

GAS-ELEC SERVICE TRENCH DETAIL SINGLE SERVICE

NOT TO SCALE

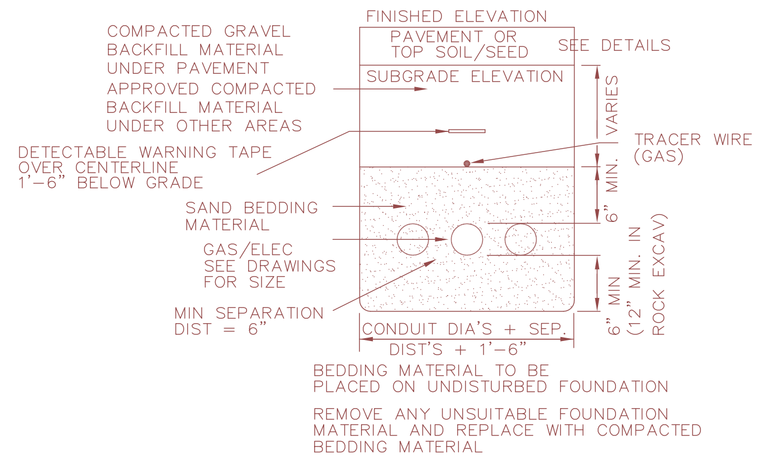

GAS-ELEC SERVICE TRENCH DETAIL MULTIPLE SERVICES

NOT TO SCALE

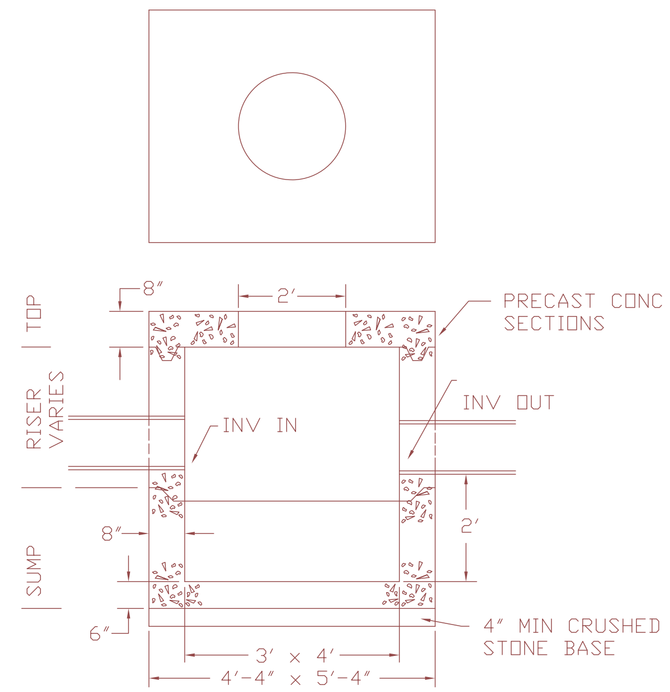

RECTANGULAR MANHOLE W/CIRCULAR FRAME AND COVER DETAIL

NTS

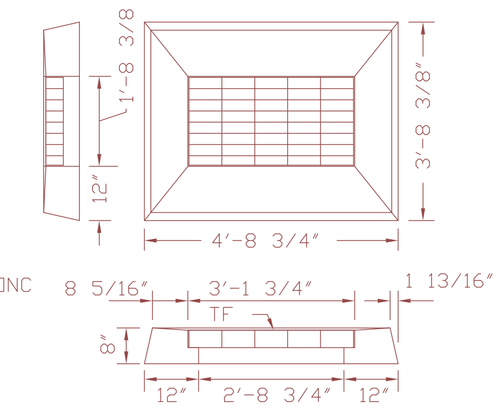

TYPE "CL" FRAME & GRATE

1"=2'

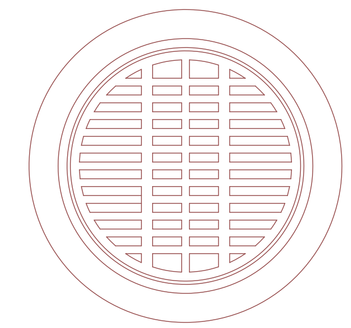

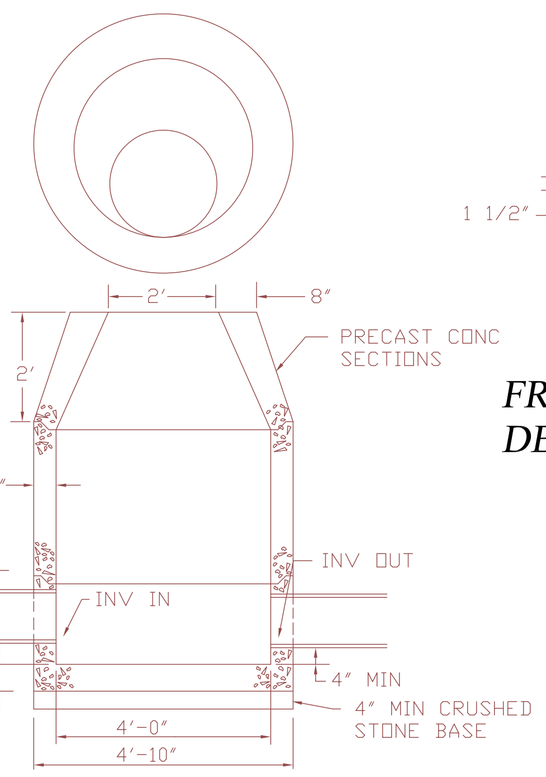

CIRCULAR MANHOLE W/CIRCULAR FRAME AND COVER DETAIL

NTS

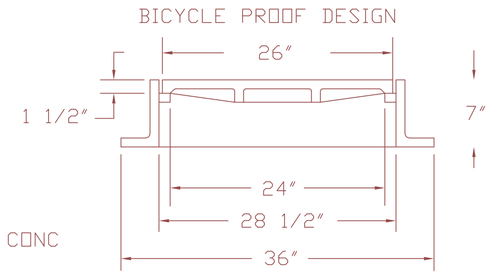

FRAME AND COVER DETAIL

NTS

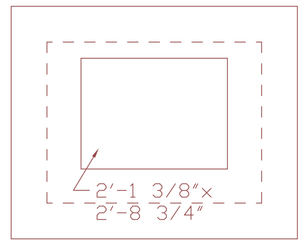

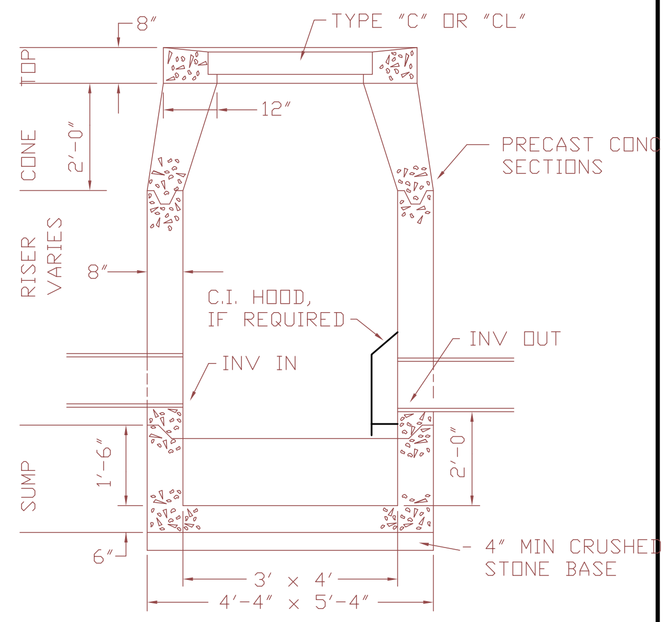

CATCH BASIN WITH SUMP

NTS 1"=2'

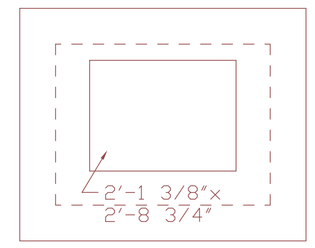

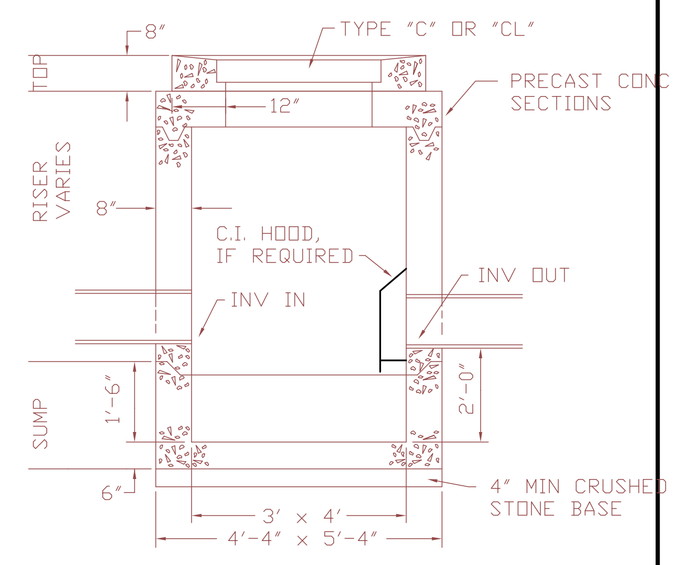

SHALLOW CATCH BASIN WITH SUMP

NTS 1"=2'

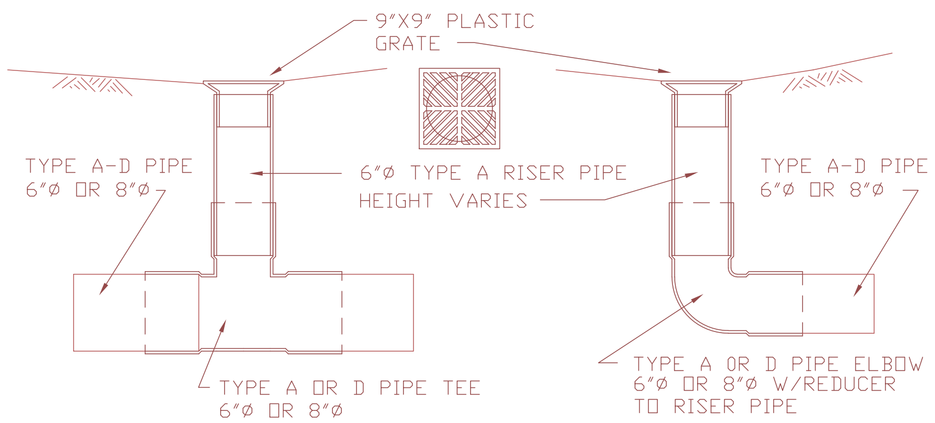

TYPICAL PLASTIC GRATE TO DRAIN CONNECTION DETAIL

NTS

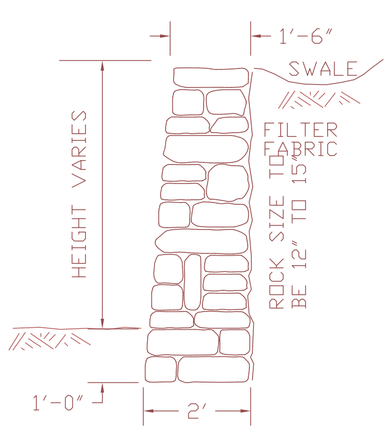

ROCK WALL DETAIL

NTS

1"=2'

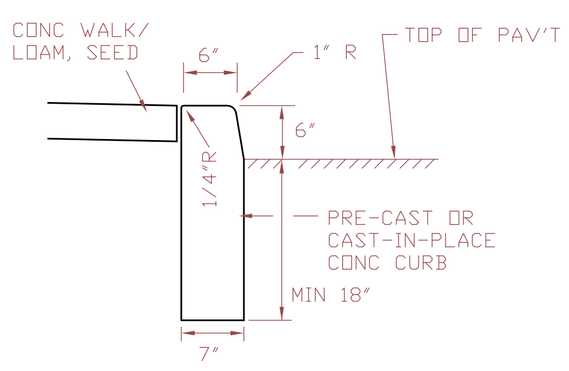

CONCRETE CURB DETAIL

1"=1'-0"

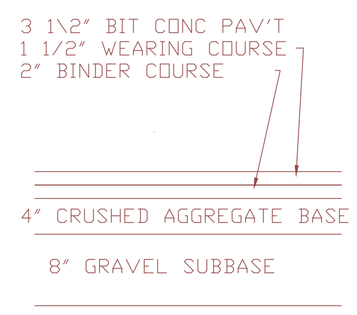

BITUMINOUS CONCRETE PAVEMENT DETAIL

NTS

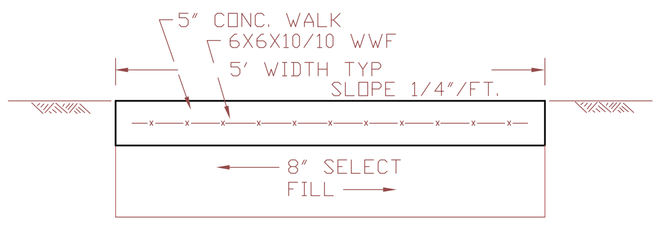

CONCRETE SIDEWALK DETAIL

NTS

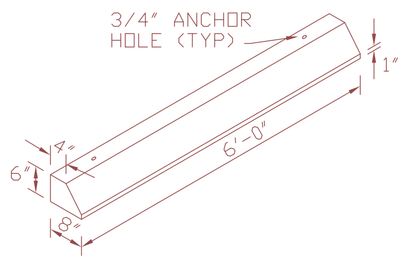

CONCRETE - 4,000 PSI, 28 DAYS
REINFORCEMENT: 2 #4 BARS
(2) 3/4" HOLES FOR ANCHORING
ANCHORING - USE 2 #5 BARS, 18" LG., EA.

CONCRETE PARKING BLOCK DETAIL

NTS

0 .5 1 2 3 4 5
ONE INCH EQUALS ONE FOOT

NOTE: CHECK GRAPHIC SCALES BEFORE USING

This drawing is NOT a Construction Document

REVISIONS		
NO.	DATE	DESCRIPTION

LAND USE PERMIT APPLICATIONS
DATTILO VILLAGE
Westbrook, Ct.
SITE DETAILS

SCALE: AS NOTED
DRWG. NO.:
PROJ. NO.:
DATE: 10-28-19

THIS PLAN IS NOT VALID WITHOUT A LIVE SIGNATURE AND SEAL.

A-L CONSULTING, LLC
P.O. BOX 863
ESSEX, CONNECTICUT
PLANNING / ENGINEERING

C-8

HEADWALL DIMENSION SCHEDULE

D	A	B	C	E	F	G	J SLOPE 1 1/2:1	J SLOPE 2:1
>30"	4'-0"	5'-3"	4'-0"	2'-0"	3'-6"	1"-6"	3'-0"	4'-3"

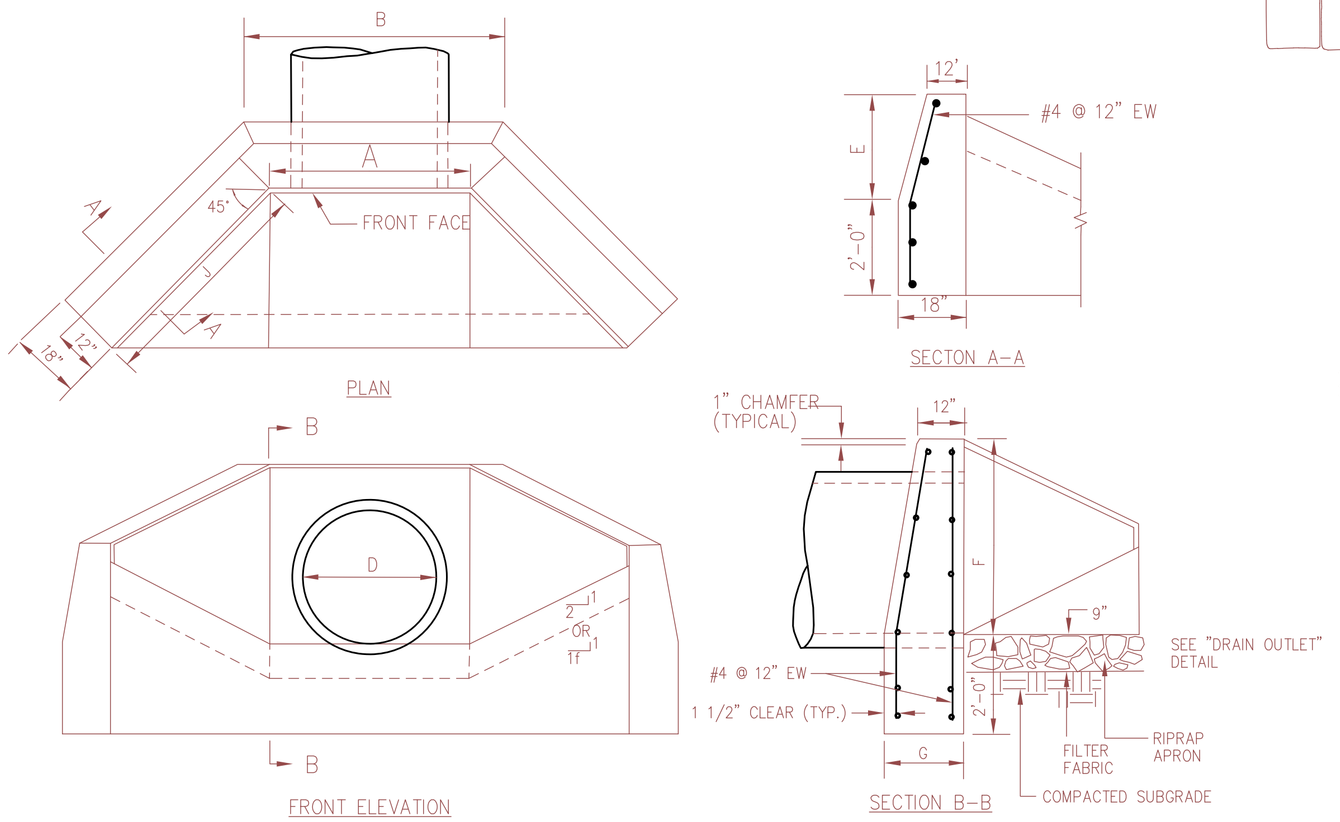

HEADWALL, ENDWALL DETAIL

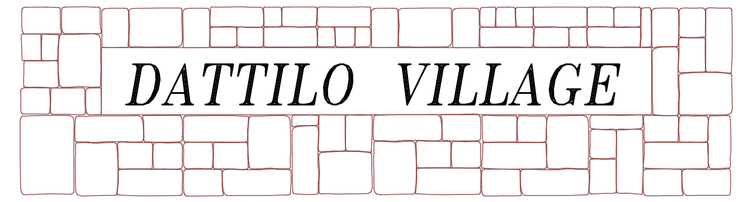

BLOCK STONE, MASONRY SET
APPROX SIZE 18" W x 13'6" LONG

PROJECT SIGN 1"=2'

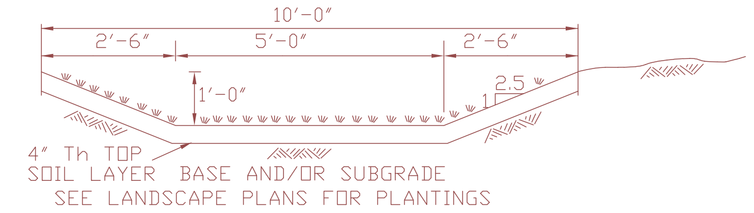

VEGETATED SWALE NTS

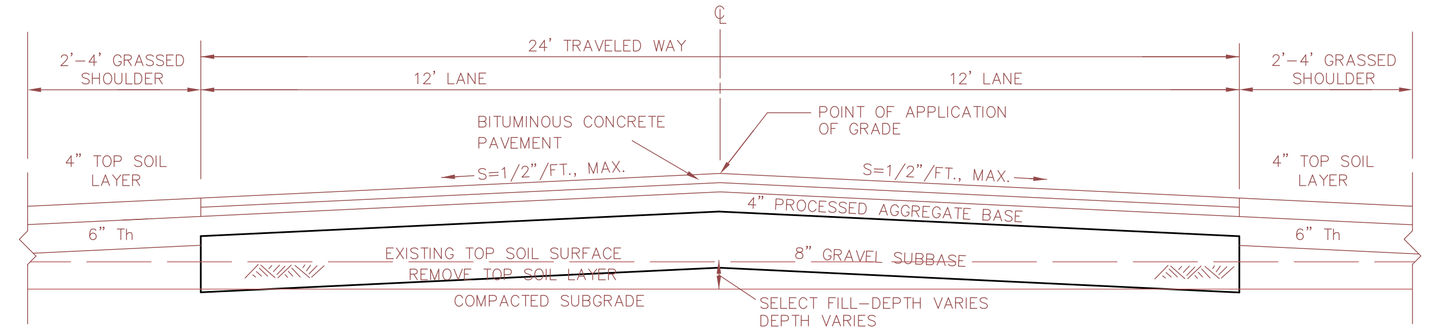

ENTRANCE - DATTILO VILLAGE
NOT TO SCALE

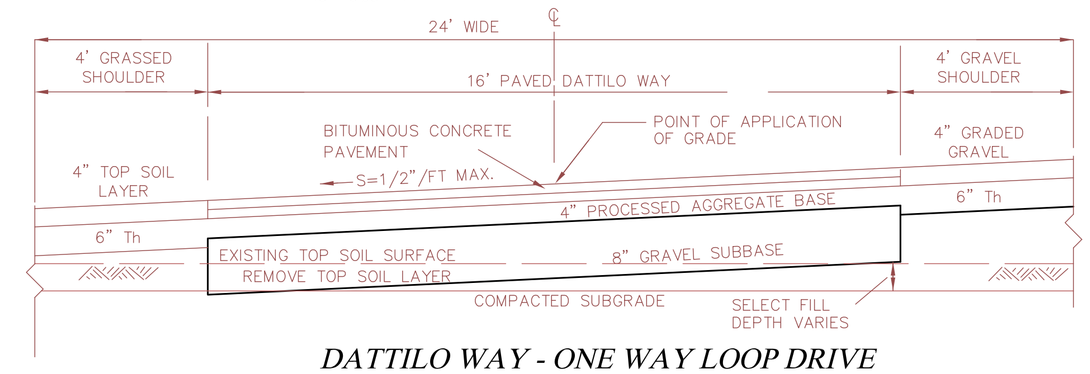

DATTILO WAY - ONE WAY LOOP DRIVE
NOT TO SCALE

NOTES:
1. PROVIDE 6" MIN. STEPS BETWEEN FILL COURSES.
2. ALL ACCESS ROADWAY SHOULDERS AND SLOPES SHALL BE TOPSOILED, SEEDED AND MULCHED.
3. REFER TO DRWG C-2 FOR PAVEMENT GRADING, X-SLOPES
4. REFER TO DRWG C-1 FOR SHOULDER TYPE LOCATIONS

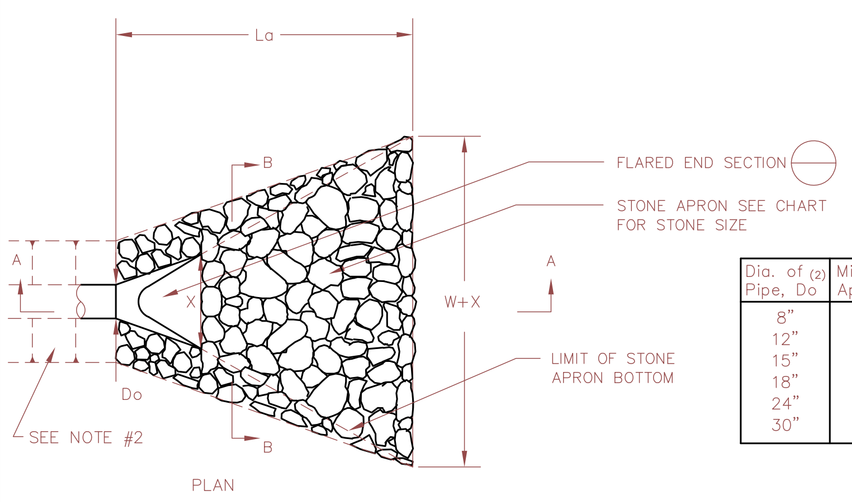

Dia. of (2) Pipe, Do	Min. Length of Apron, L a	Min. Width of Apron, W**	Median Riprap Diameter, d 50
8"	6'-0"	6'-8"	0.2 ft
12"	12'-0"	13'-0"	0.4 ft
15"	14'-0"	15'-3"	0.5 ft
18"	16'-0"	17'-6"	0.6 ft
24"	18'-0"	20'-0"	0.7 ft
30"	22'-0"	24'-6"	0.85 ft

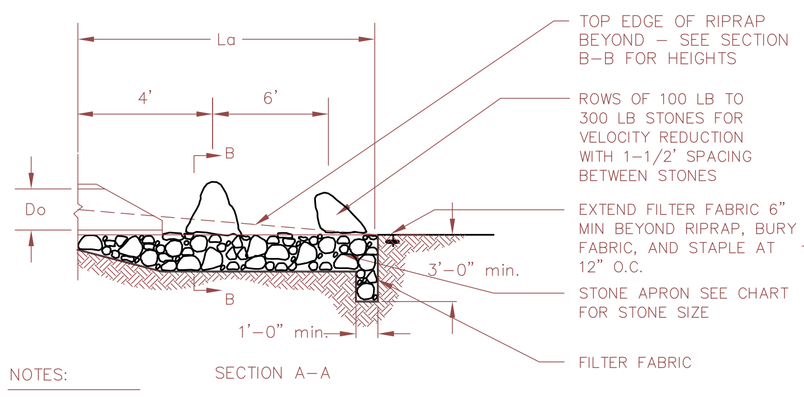

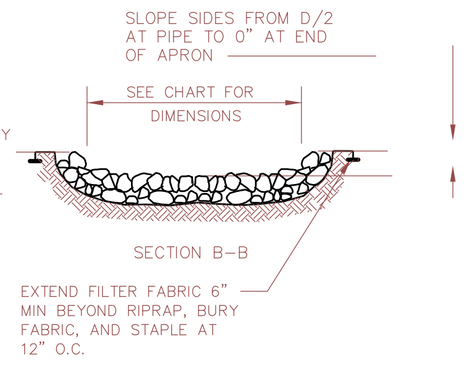

NOTES:
1. SEE EROSION AND SEDIMENT CONTROL PLAN FOR LOCATIONS.
2. FOR CHANNEL DISCHARGE USE Do EQUAL TO DEPTH OF FLOW. TO DETERMINE LENGTH OF APRON.
3. FOR WIDTH OF APRON AT CHANNELS USE WIDTH + La
4. DRAIN OUTLETS SHALL COMPLY WITH STATE OF CT GUIDELINES FOR EROSION AND SEDIMENT CONTROL

DRAIN OUTFALL WITH VELOCITY REDUCER

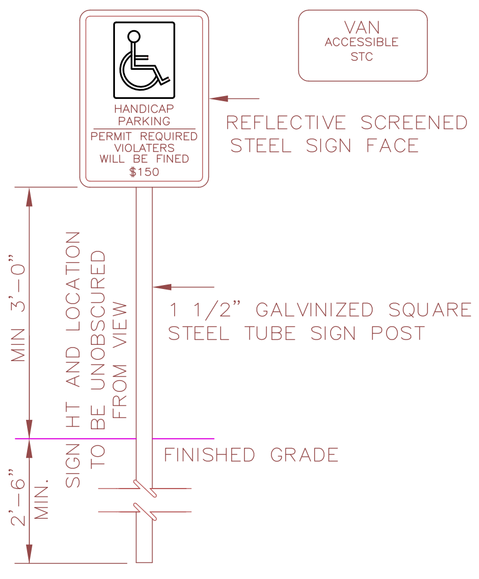

ACCESSIBLE PARKING SIGN
NOT TO SCALE

NOTE:
1. SIGN FACE SIZE, BACKGROUND AND LEGEND TEXT COLORS IN ACCORDANCE WITH STATE OF CONNECTICUT STANDARDS.

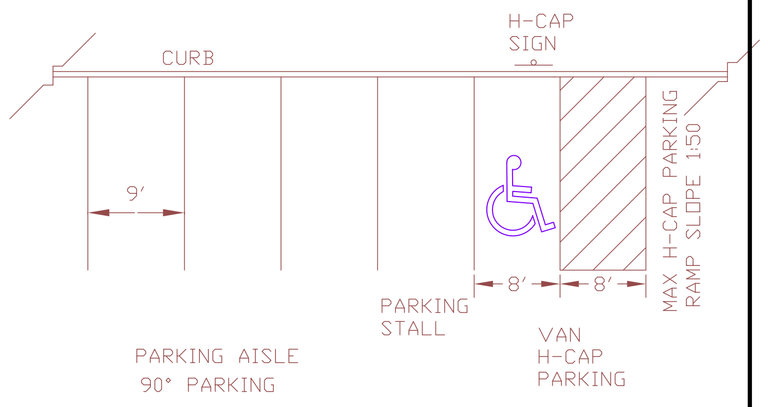

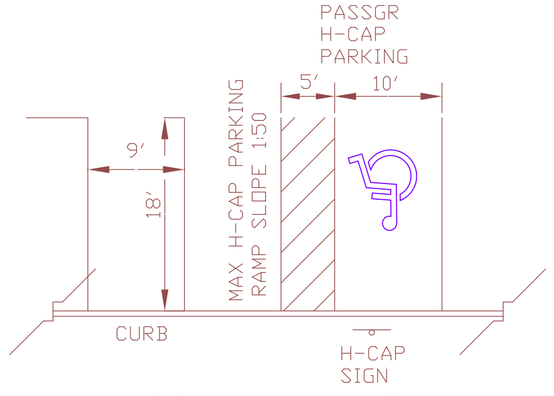

TYPICAL PARKING DIMENSIONS
1"=10'

0 .5 1 2 3 4 5
ONE INCH EQUALS ONE FOOT

NOTE: CHECK GRAPHIC SCALES BEFORE USING

This drawing is NOT a Construction Document

REVISIONS NO.	DATE	DESCRIPTION
2	05-04-2020	ADD CHANNEL DETAIL
1	11-5-19	ADD PROJ. SIGN,

LAND USE PERMIT APPLICATIONS
DATTILO VILLAGE
Westbrook, Ct.
SITE DETAILS

SCALE: AS NOTED
DRWG. NO.:
PROJ. NO.:
DATE: 10-28-19

THIS PLAN IS NOT VALID WITHOUT A LIVE SIGNATURE AND SEAL.

A-L CONSULTING, LLC
P.O. BOX 863
ESSEX, CONNECTICUT
PLANNING / ENGINEERING

C-9