Town of Westbrook Town Center Parking Improvement Plan

Bid # 2016 – TC01

WOODARD &CURRAN

1520 Highland Avenue
Cheshire, Connecticut 06410
888-265-8969

woodardcurran.com

COMMITMENT & INTEGRITY DRIVE RESULTS

September 28, 2016

This page intentionally left blank

SECTION 00 01 07

SEALS PAGE

The engineering material and data contained in these Contract Documents were prepared under the supervision and direction of the undersigned, whose seal as a registered professional engineer is affixed below.

9/28/2016

Jeffery Stearns, P.E.
Vice President / Project Manager
Woodard & Curran, Inc. (Engineer)

September 28, 2016
Date of Issue

STATE OF CONNECTICUT
JEFFERY C. STEARNS
No. 28686
LICENSED
PROFESSIONAL ENGINEER

This page intentionally left blank

SECTION 00 01 10

TABLE OF CONTENTS – BIDDING DOCUMENTS

DIVISION 00 PROCUREMENT AND CONTRACTING REQUIREMENTS

INTRODUCTORY INFORMATION

00 01 10 Table of Contents
00 01 15 List of Drawing Sheets

PROCUREMENT/BIDDING REQUIREMENTS

00 11 16 Invitation to Bid
00 21 13 Instructions to Bidders
00 22 13 Supplementary Instructions to Bidders
00 31 00 Available Project Information
00 41 01 Bid Form
00 43 13 Bid Bond – Penal Sum Form
00 43 22 Unit Prices Form
00 43 22.01 Unit Prices Form for Additional Work
00 43 93 Bid Submittal Checklist
00 45 05 Bidder's Representations and Certifications
00 45 13 Bidder's Qualifications
00 45 19 Non-Collusion Affidavit

CONTRACTING REQUIREMENTS

Sample Notice of Intent to Award (C-00 50 55)
Sample Notice of Award (C-00 51 00)

00 52 10 Agreement Form
00 54 00 Agreement Form Supplements (listing)
Performance Bond Form (C-00 61 13.13)
Payment Bond Form (C-00 61 13.16)

Sample Notice to Proceed (C-00 55 00)

00 60 00 Project Forms (listing)
Application for Payment Form (C-00 62 76)
Request for Interpretation/Information Form (C-00 63 15)
Field Order Form (C-00 63 36)
Work Change Directive Form (C-00 63 49)
Change Request Form (C- 00 63 60)
Change Order Form (C-00 63 63)
Notice of Substantial Completion Form (C-00 65 15)
Certificate of Substantial Completion Form (C-00 65 16)
Notice of Completion Form (C-00 65 18)

00 72 05 Standard General Conditions of the Construction Contract (EJCDC C-700, 2007)
Including modifications

DIVISION 00 PROCUREMENT AND CONTRACTING REQUIREMENTS (CONTINUED)

00 73 05 Supplementary Conditions (listing)
- 00 73 10 Project Specific Requirements
- 00 73 19 Health and Safety Requirements
- 00 73 43 Wage Rate Requirements
- 00 73 73 Statutory Requirements
- 00 73 78 Requirements for Municipally Held Public Works contracts Utilizing Funds of the State of Connecticut

SPECIFICATIONS

DIVISION 01 GENERAL REQUIREMENTS

01 11 00 Summary of Work
01 15 00 Specific Project Requirements and Procedures
01 15 30 Payment and Administrative Procedures and Quality Requirements
01 20 25 Measurement and Payment
01 50 00 Temporary Facilities and Controls
01 60 00 Product Requirements
01 70 00 Execution and Closeout Requirements

DIVISION 02 - EXISTING CONDITIONS

02 42 24 Selective Demolition for Earthwork

DIVISION 03 - CONCRETE

03 41 01 Precast Concrete Culvert and Transition Structure

DIVISION 10 - SPECIALTIES

10 14 00 Signage

DIVISION 26 - ELECTRICAL

26 05 00 Common Work Results for Electrical
26 05 19 Low-Voltage Electrical Power Conductors and Cables
26 05 26 Grounding and Bonding for Electrical Systems
26 05 33 Raceways and Boxes for Electrical Systems
26 05 43 Underground Ducts and Raceways for Electrical Systems
26 08 00 Commissioning of electrical Systems
26 21 00 Low-Voltage Electrical Service Systems
26 27 26 Wiring Devices
26 28 16 Enclosed Switches & Circuit Breaker
26 56 00 Exterior Lighting

DIVISION 31 – EARTHWORK

31 00 00 Earthwork

DIVISION 32 – EXTERIOR IMPROVEMENTS

32 12 00 Flexible Pavement
32 16 13 Curbs and Gutters
32 90 00 Planting

DIVISION 33 – UTILITIES

33 11 00 Water Distribution Piping and Equipment
33 99 00 Precast Concrete Structures

END OF SECTION

This page intentionally left blank

SECTION 00 01 15

LIST OF DRAWING SHEETS

DRAWING NUMBER	DRAWING TITLE
G-000	Cover Sheet
G-001	General Notes & Legend
C-100	Site Preparation & Demolition Plan
C200	Layout & Materials Plan
C-201	Grading, Drainage & Utility Plan
C-202	Route 153 Layout & Materials Plan
C-300	Site Details – 1
C-301	Site Details – 2
C-302	Site Details – 3
E-001	Electrical Legend
E-002	Electrical Site Plan
E-003	Electrical Lighting, Power Plan, Details and Schedule

This page intentionally left blank

SECTION 00 11 16

INVITATION TO BID

The Town of Westbrook, Connecticut (Owner) invites Bidders to submit sealed Bids for the Town Center Parking Improvements Project, which includes, but is not limited to clearing portions of the Site to be developed, construction of permeable pavement access drives and parking, landscaped areas, a Stormwater Management System, lighting, electrical and water service; and all materials and equipment, services and construction inherent to the Work.

This Contract is being bid in accordance with the provisions of the Connecticut General Statutes and municipal codes and ordinances. The Project is funded with State funds under the Small Town Economic Assistance Program (STEAP) and therefore is subject to certain State Laws from which municipals are typically exempt, including non-discrimination statutes and set-aside requirements. State Law requires a minimum of 25% percent of the state-funded portion of the Contract be set aside for award to Subcontractors holding current certification from the Connecticut Department of Administrative Services (DAS). The Contractor who is awarded a Contract for this Project must demonstrate good faith effort to meet the 25% set-aside goals.

The Work shall be substantially complete within 60 calendar days from the commencement of Contract Time and completed and ready for final payment 90 calendar days from the commencement of Contract Time.

A mandatory pre Bid conference will be held at 10:00AM local time on October 3, 2016 at the Mulvey Municipal Center in the Multimedia Room. A site visit will follow. Bidders are required to attend and participate in the conference.

Sealed Bids will be received until 11:00AM local time on October 14, 2016 at the Land Use Office, Mulvey Municipal Center, 866 Boston Post Road, Westbrook, Connecticut 06498, Attention: Meg Parulis, Town Planner. Bids will then and there be opened and read out loud. Bids received after the time of announced opening will not be accepted.

If a Bid is sent by mail or other delivery system, the sealed envelope containing the Bid shall be enclosed in a separate package plainly marked on the outside with the notation “BID ENCLOSED.” A Bid sent by mail or courier shall be addressed to: Land Use Office, Mulvey Municipal Center, 866 Boston Post Road, Westbrook, Connecticut 06498, Attention: Meg Parulis, Town Planner. Bidders shall be responsible to confirm the ability of overnight mailing or courier services to deliver to the Town’s offices. Bidder shall be responsible for confirming receipt of Bid by Town.

Sets of Bidding Documents may be examined electronically and at the following location on or after September 28, 2016, at 10:00AM.

Issuing Office:
Land Use Office
Mulvey Municipal Center
866 Boston Post Road
Westbrook, Connecticut 06498

Sets of Bidding Documents may be obtained electronically and in hard copy form on or after September 28, 2016 at 10:00AM:

electronically at no cost via the Town's webite by registering via email with the Land Use Office at mparulis@westbrookct.us with a request to be included on the Bidder's list.

in hardcopy from Issuing Office d*uring regular business hours* as follows.

Land Use Office
Mulvey Municipal Center
866 Boston Post Road
Westbrook, Connecticut 06498

Non-refundable purchase price for each set of Bidding Documents: $50 payable by certified check, treasurer's or cashier's check, or money order to Town of Westbrook.

Complete sets of Bidding Documents shall be used in preparing Bids; neither Owner nor Engineer assumes any responsibility for errors or misinterpretations resulting from the use of the incomplete sets of Bidding Documents or for modifications to the Bidding Documents including electronic conversion.

Bid security in the amount of 5 percent of the Bid must accompany the Bid in accordance with the Instructions to Bidders.

The Project is not subject to the prevailing wage laws per CGS §31-53(g).

Owner reserves the right to reject any or all Bids, including without limitation, nonconforming, nonresponsive, unbalanced, or conditional Bids. Owner further reserves the right to reject the Bid of any Bidder whom it finds, after reasonable inquiry and evaluation, to not be eligible or responsible. Owner may also reject the Bid of any Bidder if Owner believes that it would not be in the best interest of the Project or the public to make an award to that Bidder. Owner also reserves the right to waive all informalities not involving price, time, or changes in the Work and to negotiate contract terms with the Successful Bidder.

END OF SECTION

SECTION 00 21 13

INSTRUCTIONS TO BIDDERS

ARTICLE 1 – DEFINED TERMS

1.01 Terms used in these Instructions to Bidders have the meanings indicated in the General Conditions and Supplementary Conditions, if any. Additional terms used in these Instructions to Bidders have the meanings indicated below and as may be included in the Supplementary Instructions to Bidders.

A. *Issuing Office* – The office from which the Bidding Documents are to be issued and where the bidding procedures are to be administered identified in the Invitation to Bid.

B. *Supplements* – Those portions of the Bidding Requirements to be submitted with and made a condition of a Bid including required submittals.

C. *Notice of Intent to Award* – The written notice to the Successful Bidder indicating, conditions precedent to receiving a Notice of Award and Agreement for execution.

ARTICLE 2 – COPIES OF BIDDING DOCUMENTS

2.01 Sets of Bidding Documents may be examined and obtained as stated in the Invitation to Bid.

2.02 Complete sets of Bidding Documents shall be used in preparing Bids; neither Owner nor Engineer assumes any responsibility for errors or misinterpretations resulting from the use of incomplete sets of Bidding Documents, Bidding Documents provided by third parties, or for modifications to the Bidding Documents not made by official Addenda, including electronic conversion.

2.03 Owner, in making copies of Bidding Documents available on the above terms, do so only for the purpose of obtaining Bids for the Work and do not authorize or confer a license for any other use.

ARTICLE 3 – QUALIFICATIONS OF BIDDERS

3.01 To demonstrate Bidder's qualifications to perform the Work, Bidder shall submit written evidence such as financial data, previous experience, present commitments, and such other data requested in the Bidding Documents, and within the time frames stipulated upon Owner's request.

3.02 Bidders shall meet minimum criteria regarding experience and qualifications set forth in the General Requirements and the Specifications.

Based on EJCDC C-200. Revised by Woodard & Curran on behalf of and as approved by Owner
Copyright © 2007 National Society of Professional Engineers for EJCDC. All rights reserved.

ARTICLE 4 – EXAMINATION OF BIDDING DOCUMENTS, OTHER RELATED DATA, AND SITE

4.01 *Subsurface and Physical Conditions*

A. Section 00 73 10 of the Supplementary Conditions identifies:

1. those reports known to Owner of explorations and tests of subsurface conditions at or contiguous to the Site; and

2. those drawings known to Owner of physical conditions relating to existing surface or subsurface structures at the Site (except Underground Facilities).

B. Copies of reports and drawings referenced in Section 00 73 10, if any, are included in the Bidding Documents as indicated in Section 00 31 00, if included. Those reports and drawings are not part of the Contract Documents, but the "technical data" contained therein upon which Bidder is entitled to rely as provided in Paragraph 4.02 of the General Conditions, has been identified and established in Section 00 73 10 of the Supplementary Conditions.

C. Bidder is responsible for any interpretation or conclusion Bidder draws from any "technical data" or any other data, interpretations, opinions, or information contained in such reports or shown or indicated in such drawings.

4.02 *Underground Facilities*

A. Information and data shown or indicated in the Bidding Documents with respect to existing Underground Facilities at or contiguous to the Site is based upon information and data furnished to Owner and Engineer by owners of such Underground Facilities, including Owner, or others.

4.03 *Hazardous Environmental Condition*

A. Section 00 73 10 of the Supplementary Conditions identifies any reports and drawings known to Owner relating to a Hazardous Environmental Condition identified at the Site.

B. Copies of reports and drawings referenced in Section 00 73 10, if any, are included in the Bidding Documents as indicated in Section 00 31 00 if included. Those reports and drawings are not part of the Contract Documents, but the "technical data" contained therein upon which Bidder is entitled to rely as provided in Paragraph 4.06 of the General Conditions has been identified and established in Section 00 73 10 of the Supplementary Conditions.

Based on EJCDC C-200. Revised by Woodard & Curran on behalf of and as approved by Owner
Copyright © 2007 National Society of Professional Engineers for EJCDC. All rights reserved.

C. Bidder is responsible for any interpretation or conclusion Bidder draws from any "technical data" or any other data, interpretations, opinions, or information contained in such reports or shown or indicated in such drawings.

4.04 Provisions concerning responsibilities for the adequacy of data furnished to prospective Bidders with respect to subsurface conditions, other physical conditions, and Underground Facilities, and possible changes in the Bidding Documents due to differing or unanticipated subsurface or physical conditions appear in Paragraphs 4.02, 4.03, and 4.04 of the General Conditions and Section 00 73 10 of the Supplementary Conditions. Provisions concerning responsibilities for the adequacy of data furnished to prospective Bidders with respect to a Hazardous Environmental Condition at the Site, if any, and possible changes in the Contract Documents due to any Hazardous Environmental Condition uncovered or revealed at the Site which was not shown or indicated in the Drawings or Specifications or identified in the Contract Documents to be within the scope of the Work, appear in Paragraph 4.06 of the General Conditions and Section 00 73 10 of the Supplementary Conditions.

4.05 Upon request, Owner may provide Bidder access to the Site to conduct such examinations, investigations, explorations, tests, and studies as Bidder deems necessary for submission of a Bid. Bidder shall be responsible for obtaining permission and necessary permits and insurance for access to the Site. Bidder shall clean up and restore the Site to its former condition upon completion of any such explorations, investigations, tests, and studies. Bidder shall comply with all applicable Laws and Regulations relative to excavation and utility locates.

4.06 Reference is made to Article 7 of the General Conditions and Section 00 73 10 of the Supplementary Conditions for the identification of the general nature of other work that is to be performed at the Site by Owner or others (such as utilities and other prime contractors) that relates to the Work contemplated by these Bidding Documents. On request, Owner will provide to each Bidder for examination access to or copies of contract documents (other than portions thereof related to price) for such other work.

4.07 It is the responsibility of each Bidder before submitting a Bid to:

A. examine and carefully study the Bidding Documents, and the other related data identified in the Bidding Documents;

B. visit the Site and become familiar with and satisfy Bidder as to the general, local, and Site conditions that may affect cost, progress, and performance of the Work;

C. become familiar with and satisfy Bidder as to all federal, state, and local Laws and Regulations that may affect cost, progress, and performance of the Work;

D. carefully study all: (1) reports of explorations and tests of subsurface conditions at or contiguous to the Site and all drawings of physical conditions relating to existing surface or subsurface structures at the Site (except Underground Facilities) that have

Based on EJCDC C-200. Revised by Woodard & Curran on behalf of and as approved by Owner
Copyright © 2007 National Society of Professional Engineers for EJCDC. All rights reserved.

been identified in Section 00 73 10, as containing reliable "technical data," and (2) reports and drawings of Hazardous Environmental Conditions, if any, at the Site that have been identified in Section 00 73 10, as containing reliable "technical data";

E. consider the information known to Bidder; information and observations obtained from visits to the Site; the Bidding Documents; and the Site-related reports and drawings identified in the Bidding Documents, with respect to the effect of such information, observations, and documents on (1) the cost, progress, and performance of the Work; (2) the means, methods, techniques, sequences, and procedures of construction to be employed by Bidder, including applying any specific means, methods, techniques, sequences, and procedures of construction expressly required by the Bidding Documents; and (3) Bidder's safety precautions and programs;

F. agree at the time of submitting its Bid that no further examinations, investigations, explorations, tests, studies, or data are necessary for the determination of its Bid for performance of the Work at the price(s) bid and within the times required, and in accordance with the other terms and conditions of the Bidding Documents;

G. become aware of the general nature of the work to be performed by Owner and others at the Site that relates to the Work as indicated in the Bidding Documents;

H. correlate the information known to Bidder, information and observations obtained from visits to the Site, reports and drawings identified in the Bidding Documents, and all additional examinations, investigations, explorations, tests, studies, and data with the Bidding Documents;

I. promptly give Owner written notice of all conflicts, errors, ambiguities, or discrepancies that Bidder discovers in the Bidding Documents and confirm that the written resolution thereof by Owner is acceptable to Bidder; and

J. determine that the Bidding Documents are generally sufficient to indicate and convey understanding of all terms and conditions for the performance of the Work.

4.08 The submission of a Bid will constitute an incontrovertible representation by Bidder that Bidder has complied with every requirement of this Article 4, that without exception the Bid is premised upon performing and furnishing the Work required by the Bidding Documents and applying any specific means, methods, techniques, sequences, and procedures of construction that may be shown or indicated or expressly required by the Bidding Documents, that Bidder has given Owner written notice of all conflicts, errors, ambiguities, and discrepancies that Bidder has discovered in the Bidding Documents and the written resolutions thereof by Owner are acceptable to Bidder, and that the Bidding Documents are generally sufficient to indicate and convey understanding of all terms and conditions for performing and furnishing the Work.

Based on EJCDC C-200. Revised by Woodard & Curran on behalf of and as approved by Owner
Copyright © 2007 National Society of Professional Engineers for EJCDC. All rights reserved.

ARTICLE 5 – PRE-BID CONFERENCE

5.01 A pre bid conference will be held at the time, date and location as indicated in the Invitation to Bid. Bidders are required to attend and participate in the conference.

5.02 Addenda will be issued to all prospective Bidders of record considered necessary in response to questions arising at the conference via email. Oral statements may not be relied upon and will not be binding or legally effective.

ARTICLE 6 – SITE AND OTHER AREAS

6.01 The Site is identified in the Bidding Documents. Easements for permanent structures or permanent changes in existing facilities are to be obtained and paid for by Owner unless otherwise provided in the Bidding Documents. All additional lands and access thereto required for temporary construction facilities, construction equipment, or storage of materials and equipment to be incorporated in the Work are to be obtained and paid for by Contractor.

ARTICLE 7 – INTERPRETATIONS AND ADDENDA

7.01 All questions about the meaning or intent of the Bidding Documents are to be submitted to the Owner in writing as follows. Bidder shall be responsible for confirming receipt of questions by Owner. Submission of questions via email is acceptable.

Land Use Office
866 Boston Post Road
Westbrook, Connecticut 06498
Attention: Meg Parulis
Telephone: (860)399-3046
mparulis@westbrookct.us

7.02 Interpretations or clarifications considered necessary by Owner in response to such questions will be issued by Addenda emailed to all parties recorded by Owner as having received the Bidding Documents. Questions received less than 5 calendar days prior to the date for opening of Bids will not be answered. Only answers in the Addenda will be binding. Oral statements, interpretations, and clarifications may not be relied upon and will not be binding or legally effective.

7.03 Addenda may be issued to clarify, correct, or change the Bidding Documents as deemed advisable by Owner, will be available for examination at the Issuing Office and will be emailed to all parties recorded by Owner as having received the Bidding Documents and will be posted on the Owner's website as indicated in the Invitation to Bid.

ARTICLE 8 – BID SECURITY

8.01 A Bid must be accompanied by Bid security made payable to Owner in an amount of 5 percent of Bidder's maximum Bid price and in the form of a certified check, treasurer's

Based on EJCDC C-200. Revised by Woodard & Curran on behalf of and as approved by Owner
Copyright © 2007 National Society of Professional Engineers for EJCDC. All rights reserved.

or cashier's check, or money order, or a Bid bond on or consistent with the form included in the Bidding Documents in Section 00 43 13 issued by a surety meeting the requirements of Paragraphs 5.01 and 5.02 of the General and Supplementary Conditions, if any.

8.02 The Bid security of the Successful Bidder will be retained until such Bidder has furnished the required contract security, met the conditions of the Notice of Intent to Award (if any) and Notice of Award, and executed the Agreement, whereupon the Bid security will be returned. If the Successful Bidder fails to comply with the conditions set forth in the Notice of Intent to Award (if any) and Notice of Award within the time specified therein, Owner may consider Bidder to be in default, annul the Notice of Award, and the Bid security of that Bidder will be forfeited. Such forfeiture shall be Owner's exclusive remedy if Bidder defaults. The Bid security of other Bidders whom Owner believes to have a reasonable chance of receiving the award may be retained by Owner until the earlier of 7 days after the Effective Date of the Agreement or 91 days after the Bid opening, whereupon Bid security furnished by such Bidders will be returned. See Supplementary Instructions to Bidders (if any) for additional information.

8.03 Bid security of other Bidders whom Owner believes do not have a reasonable chance of receiving the award will be returned within 5 days after the Bid opening.

ARTICLE 9 – CONTRACT TIMES

9.01 The number of days within which, or the dates by which, the Work is to be substantially completed and ready for final payment are set forth in the Agreement.

ARTICLE 10 – LIQUIDATED DAMAGES

10.01 Provisions for liquidated damages, if any, are set forth in the Agreement.

ARTICLE 11 – SUBSTITUTE AND "OR-EQUAL" ITEMS

11.01 The Contract, if awarded, will be on the basis of materials and equipment and construction methods or procedures specified or described in the Bidding Documents without consideration of possible substitute or "or-equal" items. Whenever it is specified or described in the Bidding Documents that a substitute or "or-equal" item of material or equipment and construction methods or procedures may be furnished or used by Contractor if acceptable to Engineer, application for such acceptance will not be considered by Engineer until after the Effective Date of the Agreement.

ARTICLE 12 – SUBCONTRACTORS, SUPPLIERS AND OTHERS

12.01 The Bidding Documents may require the identity of certain Subcontractors, Suppliers, individuals, or entities to be submitted to Owner with the Bid.

12.02 As required in the Bidding Documents, or within 5 days after Bid opening if requested by Owner, Bidder shall submit a listing and experience statement with pertinent information

Based on EJCDC C-200. Revised by Woodard & Curran on behalf of and as approved by Owner
Copyright © 2007 National Society of Professional Engineers for EJCDC. All rights reserved.

regarding similar projects and other evidence of qualification for each Subcontractor, Supplier, individual, or entity. If Owner, after due investigation, has reasonable objection to any proposed Subcontractor, Supplier, individual, or entity, Owner may, before the Notice of Award is given, request apparent Successful Bidder to submit a substitute without an increase in the Bid.

12.03 If apparent Successful Bidder declines to make any such substitution, Owner may award the Contract to the next lowest responsible Bidder that proposes to use acceptable Subcontractors, Suppliers, individuals, or entities. Declining to make requested substitutions will not constitute grounds for forfeiture of the Bid security of any Bidder. Any Subcontractor, Supplier, individual, or entity so listed and against which Owner makes no written objection prior to the giving of the Notice of Award will be deemed acceptable to Owner subject to revocation of such acceptance after the Effective Date of the Agreement as provided in Paragraph 6.06 of the General and Supplementary Conditions, if any.

12.04 Contractor shall not be required to employ any Subcontractor, Supplier, individual, or entity against whom Contractor has reasonable objection.

ARTICLE 13 – PREPARATION OF BID

13.01 The Bid Form and Supplements are included with the Bidding Documents.

13.02 Bids are to be submitted as indicated in the Bid Form. All blanks on the Bid Form shall be completed in ink or typewritten and the Bid Form signed in ink. Erasures or alterations shall be initialed in ink by the person signing the Bid Form.

13.03 A Bid by a corporation shall be executed in the corporate name by the president or a vice-president or other corporate officer accompanied by evidence of authority to sign. The corporate seal shall be affixed and attested by the secretary or an assistant secretary. The corporate address and state of incorporation shall be shown.

13.04 A Bid by a partnership shall be executed in the partnership name and signed by a partner (whose title must appear under the signature), accompanied by evidence of authority to sign. The official address of the partnership shall be shown.

13.05 A Bid by a limited liability company shall be executed in the name of the firm by a member and accompanied by evidence of authority to sign. The state of formation of the firm and the official address of the firm shall be shown.

13.06 A Bid by an individual shall show the Bidder's name and official address.

13.07 A Bid by a joint venture shall be executed by each joint venturer in the manner indicated on the Bid Form. The official address of the joint venture shall be shown.

13.08 All names shall be printed in ink below the signatures.

Based on EJCDC C-200. Revised by Woodard & Curran on behalf of and as approved by Owner
Copyright © 2007 National Society of Professional Engineers for EJCDC. All rights reserved.

13.09 The Bid shall contain an acknowledgment of receipt of all Addenda, the numbers of which shall be filled in on the Bid Form.

13.10 Postal and e-mail addresses and telephone numbers for communications regarding the Bid shall be shown.

13.11 The Bid shall contain evidence of Bidder's authority and qualification to do business in the state where the Project is located, or Bidder shall covenant in writing to obtain such authority and qualification prior to award of the Contract and attach such covenant to the Bid. Bidder's state contractor license number, if any, shall also be shown on the Bid Form. See Supplementary Instructions to Bidders for additional requirements, if any.

13.12 Bidders are advised to carefully review those portions of the Bid Form and Supplements requiring Bidder's representations and certifications that are to be submitted with a Bid or subsequent to the Bid opening, and made a condition of the Bid.

ARTICLE 14 – BASIS OF BID; COMPARISON OF BIDS

14.01 *Bid Pricing*

A. Bidders shall submit a Bid on a unit price basis as provided for in the Bid Form. Bid price shall be stated in both words and figures.

B. Discrepancies between prices written in words and prices written in figures will be resolved in favor of prices written in words. Discrepancies between the indicated sum of any column of figures and the correct sum thereof will be resolved in favor of the correct sum.

14.02 *Alternates (if any)*

A. Bidders shall include a separate price for each alternate described in the Bidding Documents as provided for in the Bid Form and Supplements, if any. The price for each alternate will be the amount added to or deleted from the base Bid if Owner selects the alternate and will be applied in the same order as listed in the Bid form.

14.03 *Completion Time Comparisons*

A. Bid prices will be compared after adjusting for exceptions taken by Bidders for the number of days or dates set for Substantial Completion per Article 9 above. The adjusting amount will be determined at the rate set forth in the Agreement for liquidated damages for failing to achieve Substantial Completion.

ARTICLE 15 – SUBMITTAL OF BID

15.01 With each copy of the Bidding Documents, a Bidder is furnished a copy of the Bid Form, the Bid Security Form and Supplements. One original signed hard copy and 2 copies of

Based on EJCDC C-200. Revised by Woodard & Curran on behalf of and as approved by Owner
Copyright © 2007 National Society of Professional Engineers for EJCDC. All rights reserved.

the Bid Form, the original of the Bid security, Supplements (as listed in the Bid Submittal Checklist), and the Bid Submittal Checklist are to be completed and submitted.

15.02 A Bid shall be submitted no later than the date and time prescribed and at the place indicated in the Invitation to Bid and shall be enclosed in a plainly marked package with the Project title, the name and address of Bidder, and shall be accompanied by the Bid security and other required documents.

15.03 If a Bid is sent by mail or other delivery system, the sealed envelope containing the Bid shall be enclosed in a separate package plainly marked on the outside with the notation "BID ENCLOSED." **A Bid sent by mail or courier shall be addressed to Owner at Land Use Office, 866 Boston Post Road, Westbrook, CT 06498, Attention: Meg Parulis.** Bidders shall be responsible to confirm the ability of overnight mailing or courier services to deliver to the Owner's offices. Bidder shall be responsible for confirming receipt of Bid by Owner.

ARTICLE 16 – MODIFICATION AND WITHDRAWAL OF BID

16.01 A Bid may be modified or withdrawn by an appropriate document duly executed in the same manner that a Bid must be executed and delivered to the place where Bids are to be submitted prior to the date and time for the opening of Bids.

16.02 If within 24 hours after Bids are opened any Bidder files a duly signed written notice with Owner and promptly thereafter demonstrates to the reasonable satisfaction of Owner that there was a material and substantial mistake in the preparation of its Bid, that Bidder may withdraw its Bid, and the Bid security will be returned. Thereafter, if the Work is re-Bid, that Bidder will be disqualified from submitting a Bid on the Work.

ARTICLE 17 – OPENING OF BIDS

17.01 Bids will be opened and read out loud at the time and place indicated in the Invitation to Bid.

ARTICLE 18 – BIDS TO REMAIN SUBJECT TO ACCEPTANCE

18.01 All Bids will remain subject to acceptance for the period of time stated in the Bid Form, but Owner may, in its sole discretion, release any Bid and return the Bid security prior to the end of this period.

ARTICLE 19 – EVALUATION OF BIDS AND AWARD OF CONTRACT

19.01 Owner reserves the right to reject any or all Bids, including without limitation, nonconforming, nonresponsive, unbalanced, or conditional Bids. Owner further reserves the right to reject the Bid of any Bidder whom it finds, after reasonable inquiry and evaluation, to not be responsible or eligible or does not meet the specified qualification or quality requirements, based on poor references or otherwise. Owner may also reject the

Based on EJCDC C-200. Revised by Woodard & Curran on behalf of and as approved by Owner
Copyright © 2007 National Society of Professional Engineers for EJCDC. All rights reserved.

Bid of any Bidder if Owner believes that it would not be in the best interest of the Project or public to make an award to that Bidder. Owner also reserves the right to waive all informalities not involving price, time, or changes in the Work and to negotiate Contract terms with the Successful Bidder.

19.02 More than one Bid for the same Work from an individual or entity under the same or different names will not be considered. Reasonable grounds for believing that any Bidder has an interest in more than one Bid for the Work may be cause for disqualification of that Bidder and the rejection of all Bids in which that Bidder has an interest.

19.03 In evaluating Bids, Owner will consider whether or not the Bids comply with the prescribed requirements, and such alternates, unit prices and other data as may be requested in the Bid Form or prior to the Notice of Award.

19.04 In evaluating Bidders, Owner will consider the qualifications of Bidders and may consider the qualifications and experience of Subcontractors, Suppliers, and other individuals or entities proposed for those portions of the Work for which the identity of Subcontractors, Suppliers, and other individuals or entities are submitted.

A. Owner may also consider the operating costs, maintenance requirements, performance data and guarantees of major items of materials and equipment proposed for incorporation in the Work when such data is required to be submitted prior to the Notice of Award.

19.05 Owner may conduct such investigations as Owner deems necessary to establish the responsibility, qualifications, and financial ability of Bidders, proposed Subcontractors, Suppliers, individuals, or entities proposed for those portions of the Work in accordance with the Contract Documents.

A. Owner may conduct reference checks for the projects listed by the Bidder. Poor references may be a basis for deeming Bidder as not responsible. Reference questions will include, but are not limited to, product quality and durability, overall work quality, performance, timely delivery/completion, customer service, and general customer satisfaction.

19.06 If the Contract is to be awarded, Owner may award the Contract to the responsive, responsible, and eligible Bidder, offering the lowest price for the Bid and whose Bid is in the best interests of the Project or public.

ARTICLE 20 – CONTRACT SECURITY AND INSURANCE

20.01 Article 5 of the General Conditions and Supplementary Conditions, if any, set forth Owner's requirements as to performance and payment bonds and insurance. The Successful Bidder shall deliver such bonds and evidence of insurance coverage within 10 days of receipt of the Notice of Award.

Based on EJCDC C-200. Revised by Woodard & Curran on behalf of and as approved by Owner
Copyright © 2007 National Society of Professional Engineers for EJCDC. All rights reserved.

ARTICLE 21 – SIGNING OF AGREEMENT

21.01 The Owner will issue a Notice Award to the Successful Bidder in the form included in Bidding Documents. Within 10 days of receipt of the Notice of Award, the Successful Bidder shall comply with the conditions set forth therein and provide requested information.

21.02 Based on required reviews and approvals, Owner will thereafter provide the required number of counterparts of the Agreement and other Contract Documents which are identified in the Agreement. The Successful Bidder shall sign and deliver the required number of counterparts of the Agreement and other Contract Documents to Owner within the time specified by the Owner. After obtaining required reviews and approvals for Contract execution, Owner shall return one fully signed counterpart the Agreement and other Contract Documents.

ARTICLE 22 – RETAINAGE

22.01 Provisions concerning retainage are set forth in the Agreement.

ARTICLE 23 – CONTRACTOR'S WARRANTY AND GUARANTEES; CORRECTION PERIOD

23.01 Provisions concerning Contractor's general warranty and guarantees and correction period are set forth in Articles 6.19, 13.06, 13.07, 13.09 and 14.03 of the General and Supplementary Conditions, if any.

ARTICLE 24 – EQUAL EMPLOYMENT OPPORTUNITY, ANTI-DISCRIMINATION, AND AFFIRMATIVE ACTION

24.01 Provisions regarding the requirements for equal employment opportunity, anti-discrimination, and affirmative action programs, if any, are set forth in the Supplementary Conditions.

ARTICLE 25 – SAFETY AND HEALTH REGULATIONS

25.01 This Project is subject to the Safety and Health Regulations of the U.S. Department of Labor set forth in Title 29 CFR, Part 1926 and to all subsequent amendments and other requirements identified in Section 00 73 19 of the Supplementary Conditions.

ARTICLE 26 – SUPPLEMENTARY INSTRUCTIONS TO BIDDERS

26.01 Supplementary Instructions to Bidders, if any, are included in Section 00 22 13 and may include certain provisions required by Laws and Regulations and funding agencies. Bidders are solely responsible to determine, obtain, review and interpret the full text of applicable Laws and Regulations.

Based on EJCDC C-200. Revised by Woodard & Curran on behalf of and as approved by Owner
Copyright © 2007 National Society of Professional Engineers for EJCDC. All rights reserved.

END OF SECTION

Based on EJCDC C-200. Revised by Woodard & Curran on behalf of and as approved by Owner
Copyright © 2007 National Society of Professional Engineers for EJCDC. All rights reserved.

This page intentionally left blank

SECTION 00 22 13

SUPPLEMENTARY INSTRUCTIONS TO BIDDERS

The following supplement or modify the Instructions to Bidders pursuant to Article 26 therein. This section does not represent or reflect all applicable Laws and Regulations and may only include excerpts, portions, and para-phrasing of certain Laws and Regulations. Bidders are solely responsible to determine, obtain, review and interpret the full text of applicable Laws and Regulations.

1.01 General

A. This Contract is being bid in accordance with the applicable provisions of the Connecticut General Statutes(CGS) and municipal codes and ordinances.

1.02 Protests to Owner

A. Prior to a submission of a protest relating to or arising from the submission of Bids, all parties shall use their best efforts to resolve concerns raised by an interested party through open and frank discussions.

B. Protests shall be concise and logically presented to facilitate review by the Owner. Failure to substantially comply with any of the requirements of subparagraph B.3) may be grounds for dismissal of the protest.

C. Protests shall include the following information:

- address and fax and telephone numbers of the protester
- Solicitation or contract number
- Detailed statement of the legal and factual grounds for the protest, to include a description of resulting prejudice to the protester
- Copies of relevant documents
- Request for a ruling by the Owner
- Statement as to the form of relief requested.
- All information establishing that the protester is an interested party for the purpose of filing a protest
- All information establishing the timeliness of the protest

D. All protests filed directly with the Owner will be addressed to:

Land Use Office
866 Boston Post Road
Westbrook, Connecticut 06498
Attention: Meg Parulis
Telephone: (860)399-3046
mparulis@westbrookct.us

E. Protests based on alleged apparent improprieties in the Bid Documents and Bid procedures or evaluation and award criteria shall be filed at least 10 calendar days before the Bid submittal date. Failure to promptly file a protest based on Bid procedures or evaluation and award criteria shall be deemed a waiver of the right to pursue a protest. In all other cases, protests shall be filed no later than 5 calendar days after the basis of protest is known or should have been known, whichever is earlier, but no later than 10 days after the date for submission of Bids.

F. Action upon receipt of protest:

1. Upon receipt of a protest before award, a Contract may not be awarded, pending Owner resolution of the protest, unless contract award is justified, in writing, to be in the best interest of the Owner.

2. If award is withheld pending Owner resolution of the protest, the Owner will inform the Bidders whose Bids might become eligible for award of the Contract. If appropriate, the Bidders will be requested, before expiration of the time for acceptance of their Bids, to extend the time for acceptance to avoid the need for re-bidding. In the event of failure to obtain such extension of time, consideration should be given to proceeding with award pursuant to subparagraph B.6.a.

3. Upon receipt of a protest within 10 days after Contract award, the Owner shall immediately suspend performance, pending resolution of the protest, including any review by an independent higher level official, unless continued performance is justified, in writing for urgent and compelling reasons or is determined in writing, to be in the best interest of the Owner.

4. Pursuing an Owner protest does not extend the time of obtaining a judicial stay, injunction or other remedy.

5. The Owner shall make its best efforts to resolve protests within 20 days after the protest is filed. To the extent permitted by Laws and Regulations, the parties may exchange relevant information.

6. Owner protest decisions shall be well-reasoned, and explain the Owner position. The protest decision shall be provided to the protestor using a method that provides evidence of receipt.

1.03 Specific Requirements of the CGS

A. Debarment

1. Pursuant to CGS §31-53a, a Bidder is ineligible to bid or enter into a Contract, if on the list maintained by the Labor Commissioner (debarment list) naming persons and firms found to have disregarded its obligations under CGS § 31-53 and 31-76c to employees and subcontractors on public works contracts or to have been debarred from bidding on or entering into a federal contract in accordance with the provisions of the Davis-Bacon Act, or any firm, corporation, partnership, or association in which such persons or firms have an interest until a period of up to three years.

2. The Successful Bidder is prohibited from awarding a subcontract to any Subcontractor appearing on the debarment list and each Subcontractor shall submit a sworn affidavit to the Contractor attesting that such person, firm, corporation, partnership or association does not hold an interest of ten per cent or greater in a firm appearing on the debarment list.

B. Non-resident Contractors and State Taxes

1. Resident Bidders and their Subcontractors and non-resident verified Bidders and their Subcontractors, shall submit a Status Letter (Letter of Good Standing) from the Department of Revenue Services. **Instructions are included at the end of this section. Also see website**:

   http://www.ct.gov/drs/cwp/view.asp?a=1510&q=576072.

2. Non-resident Bidders and Subcontractors Subcontractors who are unverified shall certify it will comply with the requirements of CGS §12-430 and provide the required bond (see Section 00 73 73).

   - "Nonresident" means a contractor or subcontractor who does not maintain a regular place of business in the state of Connecticut.

   - "Verified" means a nonresident contractor or subcontractor who (I) is registered for all applicable taxes with the department, (II) has filed all required tax returns with the department, (III) has no outstanding tax liabilities to the department, and (IV) is treated as a verified contractor by the Commissioner of the Department of Revenue Services and whose status as such is verified by the Commissioner.

C. **Labor; Wages**

1. The Project is not subject to the prevailing wage laws per CGS §31-53(g).

D. **Sales Tax Exemption:** Pursuant to 12-412 (1)(A) of the Connecticut General Statutes, materials and equipment used in the Work are exempt from State of Connecticut sales and use tax, and no amounts therefor shall be included.

E. **Safety and Health**

1. Pursuant to CGS §31-53b, any person performing the Work of a mechanic, laborer or worker pursuant to the classifications of labor under CGS §31-53 on such Project, must have completed a course of at least ten hours in duration in construction safety and health approved by the federal Occupational Safety and Health Administration or, a new miner training program approved by the Federal Mine Safety and Health Administration in accordance with 30 CFR 46 or, in the case of telecommunications employees, must have completed at least ten hours of training in accordance with 29 CFR 1910.268.
2. Any plumber or electrician subject to the continuing education requirements of section 20-334d, who has completed a course of at least ten hours in duration in construction safety and health approved by the federal Occupational Safety and Health Administration five or more years prior to the date such electrician or plumber begins Work on such Project, must have completed a supplemental refresher training course of at least four hours in duration in construction safety and health taught by a federal Occupational Safety and Health Administration authorized trainer, and proof must be provided with the weekly certified payroll form for the first week each employee begins Work on the Project.

1.04 Owner Requirements

A. In the event two or more Bids are received which are of a substantially comparable total amount or unit price, and the quality and service being substantially similar with no evidence of collusion, the Board may award the Contract to a contractor or supplier having his or her or its principal place of business located in the Town of Westbrook, Connecticut.

1.05 Funding Requirements

A. The Project is funded with State funds under the Small Town Economic Assistance Program (STEAP) and therefore subject to certain State Laws from which municipals are typically exempt. The Contractor who is awarded a Contract for this Project must comply with CGS §4a-60, 4a-60a, 4a-60g, and 46a-68b through 46a-68f, inclusive, as amended by June 2015 Special Session Public Act 15-5. State law requires a minimum of twenty-five (25%) percent of the state-funded portion of the Contract for award to Subcontractors holding current certification from the Connecticut Department of Administrative Services (DAS) under the provisions of CGS §4a-60g. (25% of the Work with DAS certified Small and Minority owned businesses and 25% of that Work with DAS certified Minority, Women and/or Disabled owned businesses.) The Contractor must demonstrate good faith effort to meet the 25% set-aside goals.

B. Bidders must comply with the Contract Compliance Regulations included at the end of this Section and in Section 00 73 78 and submit the Bidder Contract Compliance Monitoring Report as part of its Bid.

C. Per CGS §46a-68d, the Successful Bidder will be required to file an affirmative action plan for approval by the Commission on Human Rights and Opportunities (CHRO) prior to award of a Contract. Bidders are encouraged to file affirmative action plans already approved by CHRO with its Bid if available.

END OF SECTION

This page intentionally left blank

STATE OF CONNECTICUT
DEPARTMENT OF REVENUE SERVICES
25 Sigourney Street
Hartford CT 06106-5032

IP 2016(10)

INFORMATIONAL PUBLICATION

Status Letters for Income Tax

Purpose: This Informational Publication describes status letters and explains the procedure for a taxpayer to request a status letter for Connecticut income tax purposes from the Department of Revenue Services (DRS).

Effective Date: Upon issuance.

Statutory Authority: Conn. Gen. Stat. §12-2.

1. What is a status letter?

DRS issues status letters for the Connecticut income tax. A status letter (also known as a Letter of Good Standing) is issued to a requesting taxpayer provided certain conditions are satisfied.

If DRS determines it is appropriate to issue a status letter, the letter will include the following information about a taxpayer as of the date it is issued:

- The taxpayer's name and year of the last income tax return received and processed by DRS; **and**
- Any outstanding balance due or an attestation that the income tax liability has been paid.

A status letter does not declare the information included on the tax return(s) is correct. DRS may determine the information on the return(s) is incorrect and, to the extent allowed by law, may make an assessment against a taxpayer.

2. Why would a taxpayer request a status letter?

A taxpayer may request a status letter to determine if the taxpayer has any overdue tax returns that need to be filed or if the taxpayer has any outstanding tax liabilities with DRS.

3. Who may request a status letter?

A status letter may be requested by:

- An individual or, if a joint Connecticut income tax return is involved, either party;
- The fiduciary of a trust or estate; **or**
- A representative of the taxpayer who has been authorized to request and receive a status letter. A properly completed **LGL-001**, *Power of Attorney*, must be submitted with the request.

4. What information must a taxpayer provide with the request for a status letter?

Requests for all income tax status letters must be made in writing. You may complete **TPG-169**, *Individual Income Tax Status Letter Request,* available on the DRS website at **www.ct.gov/DRS**, or provide a letter that includes the following:

- The taxpayer's name, mailing address, and Social Security Number (SSN);
- The year(s) for which a status letter is requested;
- A written statement that clearly explains the reason for the status letter request;
- The name (if other than the taxpayer) to whom DRS is to address the status letter;
- The mailing address or facsimile number where DRS is to send the status letter;
- An original signature of the taxpayer or the taxpayer's authorized representative if the person is requesting the status letter on behalf of the taxpayer; **and**
- A properly executed LGL-001 if the person is requesting the status letter on behalf of the taxpayer.

5. How should a status letter request be delivered to DRS?

The taxpayer or the taxpayer's authorized representative should send the status letter request and a properly completed LGL-001, if applicable, as follows:

Request for **individual taxpayers**:

Mail to: Department of Revenue Services
Income Tax Team 2
Request for a Status Letter
25 Sigourney St Ste 2
Hartford CT 06106-5032

Fax to: 860-297-5817

Request for **trusts and estates**:

Mail to: Department of Revenue Services
Corporation and Pass-Through Audit Unit
Request for a Status Letter
25 Sigourney St Ste 2
Hartford CT 06106-5032

Fax to: 860-541-3271

DRS does not accept status letter requests made by email or telephone.

6. How long does it take for DRS to issue a status letter?

DRS makes every effort to issue a status letter within 48 hours of receipt. Requests are processed in the order DRS receives them.

Status letters may either be mailed to the address stated in the request or picked up from DRS. If a telephone number is provided, DRS will call the requester when the letter is available.

If the status letter request does not contain all required information, DRS will send a letter to the taxpayer listing the additional information needed before a status letter can be issued. If DRS does not receive the additional information from the taxpayer within 30 days from the date of the letter, the taxpayer's request for a status letter will be considered withdrawn.

7. Can a taxpayer request an updated status letter after the taxpayer has rectified the problems noted in the first status letter?

Yes. A taxpayer may request a status letter that contains updated information after any outstanding liabilities are paid and any delinquent tax returns are filed. However, the updated request is considered a new request and it must be filed using the procedures outlined in this document.

Effect on Other Documents: This Informational Publication modifies and supersedes **Informational Publication 2009(10.1)**, *Status Letters for Income Tax*.

Effect of This Document: An Informational Publication issued by DRS addresses frequently asked questions about a current position, policy, or practice, usually in a less technical question and answer format.

For Further Information: Call DRS during business hours, Monday through Friday:

- **1-800-382-9463** (Connecticut calls outside the Greater Hartford calling area only); **or**
- **860-297-5962** (from anywhere).

TTY, TDD, and Text Telephone users only may transmit inquiries anytime by calling 860-297-4911.

Forms and Publications: Visit the DRS website at **www.ct.gov/DRS** to download and print Connecticut tax forms and publications.

Paperless Filing/Payment Methods (fast, easy, free, and confidential): Business and individual taxpayers can use the **Taxpayer Service Center (*TSC*)** at **www.ct.gov/TSC** to file a variety of tax returns, update account information, and make payments online.

File Electronically: You can choose first-time filer information and filing assistance or log directly into the ***TSC*** to file returns and pay taxes.

Pay Electronically: You can pay taxes for tax returns that cannot be filed through the ***TSC*.** Log in and select the *Make Payment Only* option. Designate a payment date up to the due date of the tax and mail a paper return to complete the filing process.

DRS E-Alerts Service: Get connected to the latest news from DRS. Receive notification by email of changes to legislation, policies, and procedures. **DRS E-Alerts** provide information for employer's withholding tax, ***TSC-BUS*** Online Filing Alerts, News – Press Releases, and Top 100 Delinquency List. Visit the DRS website at **www.ct.gov/DRS** and select *e-alerts* from the left navigation bar.

IP 2016(10)
Income Tax
Status Letters for Income Tax
Issued: 01/20/2016

COMMISSION ON HUMAN RIGHTS AND OPPORTUNITIES
CONTRACT COMPLIANCE REGULATIONS
NOTIFICATION TO BIDDERS

(Revised 09/3/15)

The contract to be awarded is subject to contract compliance requirements mandated by Sections 4a-60 and 4a-60a of the Connecticut General Statutes; and, when the awarding agency is the State, Sections 46a-71(d) and 46a-81i(d) of the Connecticut General Statutes. There are Contract Compliance Regulations codified at Section 46a-68j-21 through 43 of the Regulations of Connecticut State Agencies, which establish a procedure for awarding all contracts covered by Sections 4a-60 and 46a-71(d) of the Connecticut General Statutes.

According to Section 46a-68j-30(9) of the Contract Compliance Regulations, every agency awarding a contract subject to the contract compliance requirements has an obligation to "aggressively solicit the participation of legitimate minority business enterprises as bidders, contractors, subcontractors and suppliers of materials." "Minority business enterprise" is defined in Section 4a-60 of the Connecticut General Statutes as a business wherein fifty-one percent or more of the capital stock, or assets belong to a person or persons: "(1) Who are active in daily affairs of the enterprise; (2) who have the power to direct the management and policies of the enterprise; and (3) who are members of a minority, as such term is defined in subsection (a) of Section 32-9n." "Minority" groups are defined in Section 32-9n of the Connecticut General Statutes as "(1) Black Americans . . . (2) Hispanic Americans . . . (3) persons who have origins in the Iberian Peninsula . . . (4)Women . . . (5) Asian Pacific Americans and Pacific Islanders; (6) American Indians . . ." An individual with a disability is also a minority business enterprise as provided by Section 4a-60g of the Connecticut General Statutes. The above definitions apply to the contract compliance requirements by virtue of Section 46a-68j-21(11) of the Contract Compliance Regulations.

The awarding agency will consider the following factors when reviewing the bidder's qualifications under the contract compliance requirements:

(a) the bidder's success in implementing an affirmative action plan;
(b) the bidder's success in developing an apprenticeship program complying with Sections 46a-68-1 to 46a-68-17 of the Administrative Regulations of Connecticut State Agencies, inclusive;
(c) the bidder's promise to develop and implement a successful affirmative action plan;
(d) the bidder's submission of employment statistics contained in the "Employment Information Form", indicating that the composition of its workforce is at or near parity when compared to the racial and sexual composition of the workforce in the relevant labor market area; and
(e) the bidder's promise to set aside a portion of the contract for legitimate minority business enterprises. See Section 46a-68j-30(10)(E) of the Contract Compliance Regulations.

INSTRUCTIONS AND OTHER INFORMATION

The following BIDDER CONTRACT COMPLIANCE MONITORING REPORT must be completed in full, signed, and submitted with the bid for this contract. The contract awarding agency and the Commission on Human Rights and Opportunities will use the information contained thereon to determine the bidders compliance to Sections 4a-60 and 4a-60a CONN. GEN. STAT., and Sections 46a-68j-23 of the Regulations of Connecticut State Agencies regarding equal employment opportunity, and the bidder's good faith efforts to include minority business enterprises as subcontractors and suppliers for the work of the contract.

1) Definition of Small Contractor

Section 4a-60g CONN. GEN. STAT. defines a small contractor as a company that has been doing business under the same management and control and has maintained its principal place of business in Connecticut for a one year period immediately prior to its application for certification under this section, had gross revenues not exceeding fifteen million dollars in the most recently completed fiscal year, and at least fifty-one percent of the ownership of which is held by a person or persons who are active in the daily affairs of the company, and have the power to direct the management and policies of the company, except that a nonprofit corporation shall be construed to be a small contractor if such nonprofit corporation meets the requirements of subparagraphs (A) and (B) of subdivision 4a-60g CONN. GEN. STAT.

2) Description of Job Categories (as used in Part IV Bidder Employment Information) (Page 2)

MANAGEMENT: Managers plan, organize, direct, and control the major functions of an organization through subordinates who are at the managerial or supervisory level. They make policy decisions and set objectives for the company or departments. They are not usually directly involved in production or providing services. Examples include top executives, public relations managers, managers of operations specialties (such as financial, human resources, or purchasing managers), and construction and engineering managers.

BUSINESS AND FINANCIAL OPERATIONS: These occupations include managers and professionals who work with the financial aspects of the business. These occupations include accountants and auditors, purchasing agents, management analysts, labor relations specialists, and budget, credit, and financial analysts.

MARKETING AND SALES: Occupations related to the act or process of buying and selling products and/or services such as sales engineer, retail sales workers and sales representatives including wholesale.

LEGAL OCCUPATIONS: In-House Counsel who is charged with providing legal advice and services in regards to legal issues that may arise during the course of standard business practices. This category also includes assistive legal occupations such as paralegals, legal assistants.

COMPUTER SPECIALISTS: Professionals responsible for the computer operations within a company are grouped in this category. Examples of job titles in this category include computer programmers, software engineers, database administrators, computer scientists,systems analysts, and computer support specialists

ARCHITECTURE AND ENGINEERING: Occupations related to architecture, surveying, engineering, and drafting are included in this category. Some of the job titles in this category include electrical and electronic engineers, surveyors, architects, drafters, mechanical engineers, materials engineers, mapping technicians, and civil engineers.

OFFICE AND ADMINISTRATIVE SUPPORT: All clerical-type work is included in this category. These jobs involve the preparing, transcribing, and preserving of written communications and records; collecting accounts; gathering and distributing information; operating office machines and electronic data processing equipment; and distributing mail. Job titles listed in this category include telephone operators, bill and account collectors, customer service representatives, dispatchers, secretaries and administrative assistants, computer operators and clerks (such as payroll, shipping, stock, mail and file).

BUILDING AND GROUNDS CLEANING AND MAINTENANCE: This category includes occupations involving landscaping, housekeeping, and janitorial services. Job titles found in this category include supervisors of landscaping or housekeeping, janitors, maids, grounds maintenance workers, and pest control workers.

CONSTRUCTION AND EXTRACTION: This category includes construction trades and related occupations. Job titles found in this category include boilermakers, masons (all types), carpenters, construction laborers, electricians, plumbers (and related trades), roofers, sheet metal workers, elevator installers, hazardous materials removal workers, paperhangers, and painters. Paving, surfacing, and tamping equipment operators; drywall and ceiling tile installers; and carpet, floor and tile installers and finishers are also included in this category. First line supervisors, foremen, and helpers in these trades are also grouped in this category..

INSTALLATION, MAINTENANCE AND REPAIR: Occupations involving the installation, maintenance, and repair of equipment are included in this group. Examples of job titles found here are heating, ac, and refrigeration mechanics and installers; telecommunication line installers and repairers; heavy vehicle and mobile equipment service technicians and mechanics; small engine mechanics; security and fire alarm systems installers; electric/electronic repair, industrial, utility and transportation equipment; millwrights; riggers; and manufactured building and mobile home installers. First line supervisors, foremen, and helpers for these jobs are also included in the category.

MATERIAL MOVING WORKERS: The job titles included in this group are Crane and tower operators; dredge, excavating, and lading machine operators; hoist and winch operators; industrial truck and tractor operators; cleaners of vehicles and equipment; laborers and freight, stock, and material movers, hand; machine feeders and offbearers; packers and packagers, hand; pumping station operators; refuse and recyclable material collectors; and miscellaneous material moving workers.

PRODUCTION WORKERS: The job titles included in this category are chemical production machine setters, operators and tenders; crushing/grinding workers; cutting workers; inspectors, testers sorters, samplers, weighers; precious stone/metal workers; painting workers; cementing/gluing machine operators and tenders; etchers/engravers; molders, shapers and casters except for metal and plastic; and production workers.

3) Definition of Racial and Ethnic Terms (as used in Part IV Bidder Employment Information) (Page 3)

White (not of Hispanic Origin)- All persons having origins in any of the original peoples of Europe, North Africa, or the Middle East. Black(not of Hispanic Origin)- All persons having origins in any of the Black racial groups of Africa. Hispanic- All persons of Mexican, Puerto Rican, Cuban, Central or South American, or other Spanish culture or origin, regardless of race.	Asian or Pacific Islander- All persons having origins in any of the original peoples of the Far East, Southeast Asia, the Indian subcontinent, or the Pacific Islands. This area includes China, India, Japan, Korea, the Philippine Islands, and Samoa. American Indian or Alaskan Native- All persons having origins in any of the original peoples of North America, and who maintain cultural identification through tribal affiliation or community recognition.

BIDDER CONTRACT COMPLIANCE MONITORING REPORT

PART I - Bidder Information

Company Name Street Address City & State Chief Executive	Bidder Federal Employer Identification Number _____ Or Social Security Number_____
Major Business Activity (brief description)	Bidder Identification (response optional/definitions on page 1) -Bidder is a small contractor. Yes __No __ -Bidder is a minority business enterprise Yes __No __ (If yes, check ownership category) Black ___ Hispanic___ Asian American___ American Indian/Alaskan Native ___Iberian Peninsula ___ Individual(s) with a Physical Disability___ Female ___ - Bidder is certified as above by State of CT Yes__ No__
Bidder Parent Company (If any)	
Other Locations in Ct. (If any)	

PART II - Bidder Nondiscrimination Policies and Procedures

1. Does your company have a written Affirmative Action/Equal Employment Opportunity statement posted on company bulletin boards? Yes__ No__	7. Do all of your company contracts and purchase orders contain non-discrimination statements as required by Sections 4a-60 & 4a-60a Conn. Gen. Stat.? Yes__ No__
2. Does your company have the state-mandated sexual harassment prevention in the workplace policy posted on company bulletin boards? Yes__ No__	8. Do you, upon request, provide reasonable accommodation to employees, or applicants for employment, who have physical or mental disability? Yes__ No__
3. Do you notify all recruitment sources in writing of your company's Affirmative Action/Equal Employment Opportunity employment policy? Yes__ No__	9. Does your company have a mandatory retirement age for all employees? Yes__ No__
4. Do your company advertisements contain a written statement that you are an Affirmative Action/Equal Opportunity Employer? Yes __No __	10. If your company has 50 or more employees, have you provided at least two (2) hours of sexual harassment training to all of your supervisors? Yes__ No__ NA__
5. Do you notify the Ct. State Employment Service of all employment openings with your company? Yes __No __	11. If your company has apprenticeship programs, do they meet the Affirmative Action/Equal Employment Opportunity requirements of the apprenticeship standards of the Ct. Dept. of Labor? Yes __No __NA __
6. Does your company have a collective bargaining agreement with workers? Yes__ No__ 6a. If yes, do the collective bargaining agreements contain non-discrim ination clauses covering all workers? Yes__ No__ 6b. Have you notified each union in writing of your commitments under the nondiscrimination requirements of contracts with the state of Ct? Yes__ No__	12. Does your company have a written affirmative action Plan? Yes __No __ If no, please explain. 13. Is there a person in your company who is responsible for equal employment opportunity? Yes __No __ If yes, give name and phone number. _____

Part III - Bidder Subcontracting Practices

1. Will the work of this contract include subcontractors or suppliers? Yes__ No__

1a. If yes, please list all subcontractors and suppliers and report if they are a small contractor and/or a minority business enterprise. (defined on page 1 / use additional sheet if necessary)

1b. Will the work of this contract require additional subcontractors or suppliers other than those identified in 1a. above? Yes__ No__

PART IV - Bidder Employment Information

Date:

JOB CATEGORY *	OVERALL TOTALS	WHITE (not of Hispanic origin)		BLACK (not of Hispanic origin)		HISPANIC		ASIAN or PACIFIC ISLANDER		AMERICAN INDIAN or ALASKAN NATIVE	
		Male	Female	Male	Female	Male	Female	Male	Female	male	female
Management											
Business & Financial Ops											
Marketing & Sales											
Legal Occupations											
Computer Specialists											
Architecture/Engineering											
Office & Admin Support											
Bldg/ Grounds Cleaning/Maintenance											
Construction & Extraction											
Installation , Maintenance & Repair											
Material Moving Workers											
Production Occupations											
TOTALS ABOVE											
Total One Year Ago											
FORMAL ON THE JOB TRAINEES (ENTER FIGURES FOR THE SAME CATEGORIES AS ARE SHOWN ABOVE)											
Apprentices											
Trainees											

*NOTE: JOB CATEGORIES CAN BE CHANGED OR ADDED TO (EX. SALES CAN BE ADDED OR REPLACE A CATEGORY NOT USED IN YOUR COMPANY)

PART V - Bidder Hiring and Recruitment Practices

1. Which of the following recruitment sources are used by you? (Check yes or no, and report percent used)				2. Check (X) any of the below listed requirements that you use as a hiring qualification		3. Describe below any other practices or actions that you take which show that you hire, train, and promote employees without discrimination
SOURCE	YES	NO	% of applicants provided by source	(X)		
State Employment Service					Work Experience	
Private Employment Agencies					Ability to Speak or Write English	
Schools and Colleges					Written Tests	
Newspaper Advertisement					High School Diploma	
Walk Ins					College Degree	
Present Employees					Union Membership	
Labor Organizations					Personal Recommendation	
Minority/Community Organizations					Height or Weight	
Others (please identify)					Car Ownership	
					Arrest Record	
					Wage Garnishments	

Certification (Read this form and check your statements on it CAREFULLY before signing). I certify that the statements made by me on this BIDDER CONTRACT COMPLIANCE MONITORING REPORT are complete and true to the best of my knowledge and belief, and are made in good faith. I understand that if I knowingly make any misstatements of facts, I am subject to be declared in non-compliance with Section 4a-60, 4a-60a, and related sections of the CONN. GEN. STAT.

(Signature)	(Title)	(Date Signed)	(Telephone)

SECTION 00 31 00

AVAILABLE PROJECT INFORMATION

INFORMATION	LOCATION OF INFORMATION
Easements, Permits, Rights-of-Way	Following this page
BL Companies Pavement Sections	Following this page
Survey	Reflected on Drawings

END OF SECTION

This page intentionally left blank

STATE OF CONNECTICUT
DEPARTMENT OF TRANSPORTATION
DISTRICT II
171 Salem Turnpike
Norwich, Connecticut 06360
Phone: (860) 823-3114

July 14, 2016

Mr. Paul J. Jaques, P.E.
Woodard & Curran
33 Broad Street – One Weybosset Hill, 7th Floor
Providence, Rhode Island 02903

Dear Mr. Jacques:

Subject: Town Center Parking Improvement Plan
Town Center (Route 153)
In the Town of Westbrook

This office has completed our review of the submitted plans entitled, "Town Center Parking Improvement Plan – Town Center (Route 153) – Westbrook, Connecticut" dated May 6, 2016, and last revised June 2016. We find the proposal acceptable and have one further comment at this time.

1. If the Town of Westbrook chooses to submit the Encroachment Permit application in their name, the bond and application fee will be waived. Applications received from parties other than the Town of Westbrook for this project will need to adhere to the requirements listed below.

Upon receiving Town Planning and Zoning approval, a final review will be performed by the Department of Transportation, at which time additional changes may be required. As regulated by Connecticut General Statute 13b-17, no work is to commence within the State right of way without first obtaining a DOT encroachment permit.

An encroachment permit may be obtained upon approval of the following:

- Two complete sets of the latest town-approved plans (40 scale or larger).
- A completed encroachment permit application (State Form PMT-1 Rev. 5/91).
- A Bond on State Form CLA-5 in the amount of $15,000 in the owner or developer's name.
- Proof of minimum insurance requirements (General Liability of $1,000,000 and Aggregate of $2,000,000). Insurance may be carried by the contractor.
- A check or money order in the amount of $60 payable to "Treasurer - State of Connecticut."

These forms, along with additional information, may be obtained at www.ct.gov/dot.

If you have any questions in regard to this matter, please contact Mr. Daniel McBride of this office at (860) 823-3114, or by email at Daniel.McBride@ct.gov.

Sincerely,

Andrew S. Morrill
Special Services Section Manager
Bureau of Highway Operations

cc: Westbrook Planning and Zoning

An Equal Opportunity Employer
Printed on recycled or recovered paper

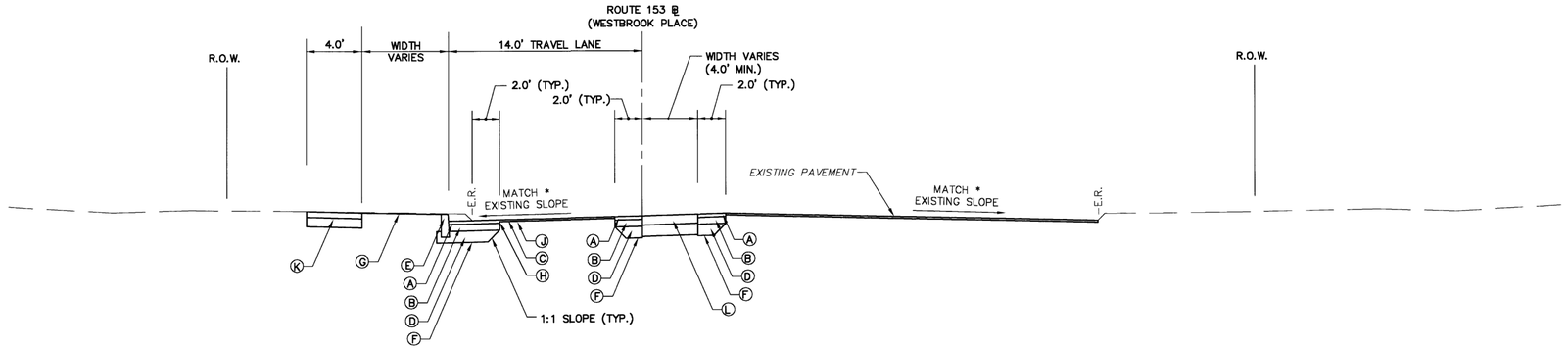

ROUTE 153 (WESTBROOK PLACE)

STA. 41+21 TO STA. 41+33
STA. 41+69 TO STA. 41+84
STA. 42+20 TO STA. 42+35
STA. 42+71 TO STA. 43+00

* MINIMUM OF 1.5%

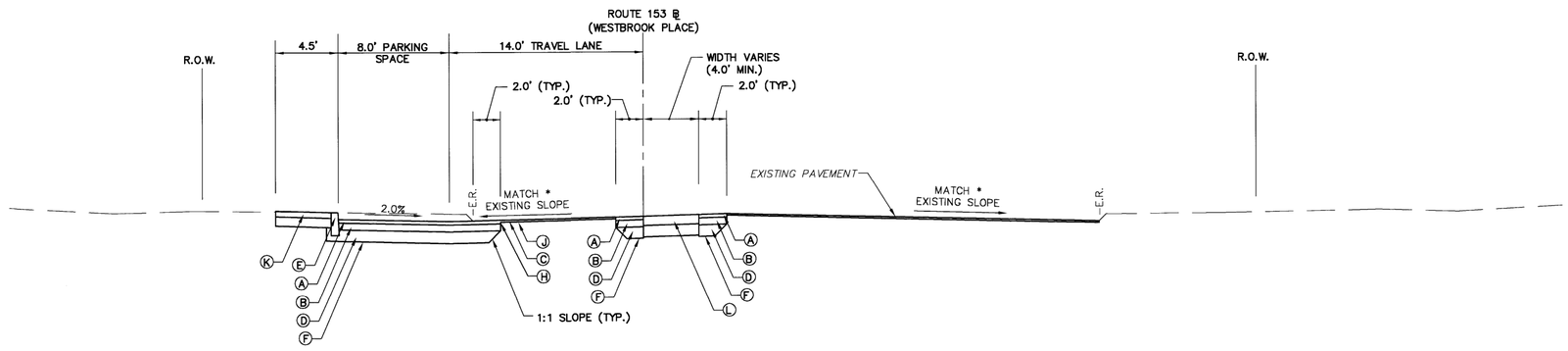

ROUTE 153 (WESTBROOK PLACE)

STA. 41+41 TO STA. 41+61
STA. 41+92 TO STA. 42+12
STA. 42+43 TO STA. 42+63

* MINIMUM OF 1.5%

LEGEND

1

- (A) 3" BIT. CONC. PAVEMENT-CLASS 1 (TYP.) (PLACED IN EQUAL LIFTS OF 1.5" AND 1.5")
- (B) 6" BIT. CONC. PAVEMENT-CLASS 4 (TYP.) (PLACED IN TWO EQUAL LIFTS)
- (C) 2" MILL AND OVERLAY-CLASS 1 (TYP.)
- (D) 10" PROCESSED AGGREGATE SUBBASE
- (E) CONCRETE CURBING
- (F) FORMATION OF SUBGRADE
- (G) FURNISH AND PLACE TOPSOIL, TURF ESTABLISHMENT
- (H) CUT BITUMINOUS CONCRETE PAVEMENT
- (I) CONCRETE SIDEWALK
- (J) APPLY TACK COAT
- (K) STONE DUST WALK
- (L) STAMPED CONCRETE PAVEMENT

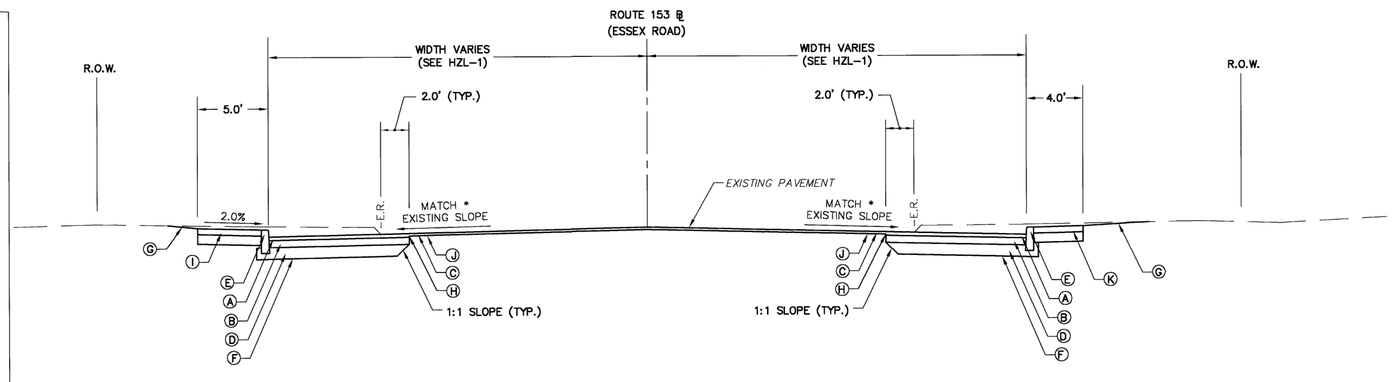

ROUTE 153 (ESSEX ROAD)

STA. 30+50 TO STA. 33+50

* MINIMUM OF 1.5%

BL Companies

ARCHITECTURE
ENGINEERING
PLANNING
LANDSCAPE ARCHITECTURE
LAND SURVEYING
ENVIRONMENTAL SCIENCES

355 Research Parkway
Meriden, CT 06450
(203) 630-1406
(203) 630-2615 Fax

CONSULTANT PROJECT NO. 04C0865

PROJECT TYPE

DRAWINGS/SPECIFICATIONS BY:
- ☐ WALGREENS'
- ■ LANDLORD'S CONSULTANT

ALL CONSTRUCTION WORK, UNLESS NOTED OTHERWISE, BY:
- ☐ WALGREENS' CONTRACTOR
- ■ LANDLORD'S CONTRACTOR

STORE	BUILDING
NEW ■	NEW ■
REMODELING ☐	EXISTING ☐
RELOCATION ☐	NEW SHELL ONLY ☐
OTHERS ☐	

NO.	DATE	BY	DESCRIPTION	CONST
1.	6/5/07		PER CT DOT COMMENTS	

REVISIONS

CERTIFICATION AND SEAL

STORE NUMBER #10244

PROPOSED WALGREENS (OFF-SITE IMPROVEMENTS)

1211 AND 1223 BOSTON POST ROAD
AND 7 GOLF LINKS ROAD
TOWN OF WESTBROOK, CONNECTICUT

DRAWING TITLE
TYPICAL SECTION SHEET

CADD PLOT: TTYP04C086501
VOID PLOT:
SUPERSEDES PLAN DATED:

SCALE: N.T.S.
DRAWN BY: B.J.P.
DATE: 2/12/07
REVIEWED BY: D.A.K.

DRAWING NO. TYP-2

SECTION 00 41 01

BID FORM

ARTICLE 1 – DEFINED TERMS

1.01 The terms used in this Bid with initial capital letters have the meanings stated in the Instructions to Bidders, the General Conditions and Supplementary Conditions, if any.

ARTICLE 2 – BID RECIPIENT

2.01 This Bid is submitted to the Owner at the Land Use Office, Mulvey Municipal Center, 866 Boston Post Road, Westbrook, Connecticut, Attention Meg Parulis, Town Planner.

2.02 The undersigned Bidder proposes and agrees, if this Bid is accepted, to enter into an Agreement with Owner in the form included in the Bidding Documents to perform all Work as specified or indicated in the Bidding Documents for the prices and within the times indicated in this Bid and in accordance with the other terms and conditions of the Bidding Documents.

ARTICLE 3 – BIDDER'S ACKNOWLEDGEMENTS

3.01 Bidder accepts all of the terms and conditions of the Bidding Documents including, without limitation:

A. those dealing with disposition of Bid security;

B. those included in the Supplementary Instructions to Bidders;

C. insurance and bonding requirements (Payment Bond and Performance Bond each equal to 100% of the total Contract Price) set forth in the General Conditions and Supplementary Conditions, if any;

D. Contract Times as set forth in the Agreement; and

E. provisions for liquidated damages as set forth in the Agreement.

3.02 This Bid will remain subject to acceptance for 90 days after the Bid opening or for such longer period of time that Bidder may agree to in writing upon request of Owner.

3.03 Bidder acknowledges receipt of the following Addenda.

Addendum No.	Addendum Date
_____	_____
_____	_____
_____	_____
_____	_____
_____	_____

3.04 Bidder acknowledges the representations and certifications included in Section 00 45 05 are made a condition of the Bid.

ARTICLE 4 – BASIS OF BID

4.01 Bidder will complete the Work in accordance with the Contract Documents for the following price(s) based on unit prices included in Section 00 43 22. **Bidder must complete all items.**

TOTAL BID PRICE (based on Unit Prices Form)

_____

_____

_____ Dollars and _____Cents
(Use words)

$_____
(Use figures)

4.02 Unit Prices have been computed in accordance with Paragraph 11.03.A of the General Conditions and Supplementary Conditions, if any.

4.03 Bidder acknowledges that estimated quantities are not guaranteed, and are solely for the purpose of comparison of Bids, and final payment for unit price items will be based on actual quantities determined and based on the unit prices included in Section 00 43 22, as provided in the General Conditions and Supplementary Conditions, if any.

4.04 Contract Price Adjustments

A. Additional Work may be provided for the following prices based on unit prices included in Section 00 43 22.01 Unit Prices Form for Additional Work. This work is separate from the Work of the base Contract and pricing will be included in the Agreement for Contract Price Modifications, separate from and not included in the Total Contract Price.

B. Prices below will be used in determining responsiveness, but will not be used in evaluating Bidder's base Bid price.

PRICES EXCLUDE SALES AND USE TAX

CONTRACT PRICE MODIFICATION 1 - GRANITE CURB
Lump sum price for all materials and Work required to substitute precast concrete curb with granite curb.

$_____
(Use figures)

_____
_____
_____ Dollars and _____Cents
(Use words)

CONTRACT PRICE MODIFICATION 2 – ROUTE 153 MODIFICATIONS
Based on Section 004322.01 - Unit Prices Form for Additional Work.

$_____
(Use figures)

_____
_____
_____ Dollars and _____Cents
(Use words)

CONTRACT PRICE MODIFICATION 3 – LIGHTING
Lump sum price for all materials and Work required to install light poles, fixtures and outlets to the light pole foundations as depicted in the Drawings.

$_____
(Use figures)

_____
_____
_____ Dollars and _____Cents
(Use words)

ARTICLE 5 – TIME OF COMPLETION

5.01 Bidder agrees that the Work will be substantially complete and will be completed and ready for final payment in accordance with Paragraph 14.07 of the General Conditions and Supplementary Conditions, if any, on or before the dates or within the number of calendar days indicated in the Agreement.

5.02 Bidder accepts the provisions of the Agreement as to liquidated damages.

ARTICLE 6 – ATTACHMENTS TO THIS BID

6.01 The following documents are submitted with and made a condition of this Bid:

00 43 13 Bid Bond – Penal Sum Form

Supplements:

00 43 93 Bid Submittal Checklist

00 45 05 Bidder's Representations and Certifications including required submittals

00 45 13 Bidder's Qualifications

00 45 19 Non-collusion Affidavit

ARTICLE 7 – BID SUBMITTAL

7.01 This Bid is submitted by:

A Corporation

Corporation Name: _____

State of incorporation: _____

Type: _____
(*General Business, Professional, Service, other*)

By: _____
(*Signature – attach evidence of authority to sign*)

Name (*typed or printed*): _____

Title: _____

(CORPORATE SEAL)
Attest: _____
(*Signature of Corporate Secretary*)

Business Address: _____

_____

Phone & Facsimile Nos: _____

Email address: _____

Date of qualification to do business as out-of-state corporation: _____

A Limited Liability Company (LLC)

LLC Name: _____

State in which organized: _____

By: _____
(*Signature – attach evidence of authority to sign*)

Name (*typed or printed*): _____

Title: _____

Business Address: _____

_____

Phone & Facsimile Nos: _____

Email address: _____

A Joint Venture

First Joint Venturer Name: _____

By: _____
(*Signature – attach evidence of authority to sign*)

Name (*typed or printed*): _____

Title: _____

Business Address: _____

_____

Phone & Facsimile Nos: _____

Email address: _____

Second Joint Venturer Name: _____

By: _____
(*Signature – attach evidence of authority to sign*)

Name (*typed or printed*): _____

Title: _____

Business Address: _____

_____

Phone & Facsimile Nos: _____

Email address: _____

(Each joint venturer must sign. The manner of signing for each individual, partnership, corporation and limited liability company that is a party to the joint venture should be in the manner indicated above.)

A Partnership

Partnership Name: _____(SEAL)

By: _____
(*Signature of general partner – attach evidence of authority to sign*)

Name (*typed or printed*): _____

Business Address: _____

_____

Phone & Facsimile Nos: _____

Email address: _____

An Individual

Name (*typed or printed*): _____

By: _____
(*Individual's signature*)

Doing business as: _____

Business Address: _____

_____

Phone & Facsimile Nos: _____

Email address: _____

SUBMITTED ON:
EIN/FEIN:

Communications concerning this Bid shall be addressed to:

Name: _____

Title: _____

Business Address: _____

_____

Phone & Facsimile Nos: _____

Email address: _____

END OF SECTION

BID BOND

Any singular reference to Bidder, Surety, Owner or other party shall be considered plural where applicable.

BIDDER *(Name and Address)*:

SURETY *(Name and Address of Principal Place of Business)*:

OWNER *(Name and Address)*:

BID
Bid Due Date:
Description *(Project Name and Include Location)*:

BOND
Bond Number:
Date *(Not earlier than Bid due date)*:
Penal sum _____ $ _____
(Words) (Figures)

Surety and Bidder, intending to be legally bound hereby, subject to the terms set forth below, do each cause this Bid Bond to be duly executed by an authorized officer, agent, or representative.

BIDDER	**SURETY**
_____ (Seal)	_____ (Seal)
Bidder's Name and Corporate Seal	Surety's Name and Corporate Seal
By: _____	By: _____
Signature	Signature (Attach Power of Attorney)
_____	_____
Print Name	Print Name
_____	_____
Title	Title
Attest: _____	Attest: _____
Signature	Signature
_____	_____
Title	Title

Note: Above addresses are to be used for giving any required notice. Provide execution by any additional parties, such as joint venturers, if necessary.

1. Bidder and Surety, jointly and severally, bind themselves, their heirs, executors, administrators, successors, and assigns to pay to Owner upon default of Bidder the penal sum set forth on the face of this Bond. Payment of the penal sum is the extent of Bidder's and Surety's liability. Recovery of such penal sum under the terms of this Bond shall be Owner's sole and exclusive remedy upon default of Bidder.

2. Default of Bidder shall occur upon the failure of Bidder to deliver within the time required by the Bidding Documents (or any extension thereof agreed to in writing by Owner) the executed Agreement required by the Bidding Documents and any performance and payment bonds required by the Bidding Documents.

3. This obligation shall be null and void if:

3.1 Owner accepts Bidder's Bid and Bidder delivers within the time required by the Bidding Documents (or any extension thereof agreed to in writing by Owner) the executed Agreement required by the Bidding Documents and any performance and payment bonds required by the Bidding Documents, or

3.2 All Bids are rejected by Owner, or

3.3 Owner fails to issue a Notice of Award to Bidder within the time specified in the Bidding Documents (or any extension thereof agreed to in writing by Bidder and, if applicable, consented to by Surety when required by Paragraph 5 hereof).

4. Payment under this Bond will be due and payable upon default of Bidder and within 30 calendar days after receipt by Bidder and Surety of written notice of default from Owner, which notice will be given with reasonable promptness, identifying this Bond and the Project and including a statement of the amount due.

5. Surety waives notice of any and all defenses based on or arising out of any time extension to issue Notice of Award agreed to in writing by Owner and Bidder, provided that the total time for issuing Notice of Award including extensions shall not in the aggregate exceed 120 days from Bid due date without Surety's written consent.

6. No suit or action shall be commenced under this Bond prior to 30 calendar days after the notice of default required in Paragraph 4 above is received by Bidder and Surety and in no case later than one year after Bid due date.

7. Any suit or action under this Bond shall be commenced only in a court of competent jurisdiction located in the state in which the Project is located.

8. Notices required hereunder shall be in writing and sent to Bidder and Surety at their respective addresses shown on the face of this Bond. Such notices may be sent by personal delivery, commercial courier, or by United States Registered or Certified Mail, return receipt requested, postage pre-paid, and shall be deemed to be effective upon receipt by the party concerned.

9. Surety shall cause to be attached to this Bond a current and effective Power of Attorney evidencing the authority of the officer, agent, or representative who executed this Bond on behalf of Surety to execute, seal, and deliver such Bond and bind the Surety thereby.

10. This Bond is intended to conform to all applicable statutory requirements. Any applicable requirement of any applicable statute that has been omitted from this Bond shall be deemed to be included herein as if set forth at length. If any provision of this Bond conflicts with any applicable statute, then the provision of said statute shall govern and the remainder of this Bond that is not in conflict therewith shall continue in full force and effect.

11. The term "Bid" as used herein includes a Bid, offer, or proposal as applicable.

SECTION 00 43 22

UNIT PRICES FORM

Provide unit pricing for each Bid item in both words and figures. Provide Bid item totals in figures. Discrepancies between prices written in words and prices written in figures will be resolved in favor of prices written in words. Discrepancies between the multiplication of estimated quantities and unit prices will be resolved in favor of the unit prices.

BID PRICES SHALL EXCLUDE SALES AND USE TAX.

Item No.	Item Description with Unit or Lump Sum Price in Written Words	Estimated Quantity & Unit	Unit Bid Price (Figures)	Total Bid Item Price (Figures)
1	Remove and Dispose SNET Pole @ _____ _____ Dollars and _____Cents PER EACH	1 EA		
2	Remove and Relocate Mailboxes @ _____ _____ Dollars and _____Cents PER EACH	2 EA		
3	Clearing, Grubbing and Surface Feature Removal @ _____ _____ Dollars and _____Cents PER SQUARE YARD	2488 SY		
4	Remove and Relocate Signs and Posts @ _____ _____ Dollars and _____Cents PER EACH	1 EA		
5	15-inch Class IV RCP Pipe @ _____ _____ Dollars and _____Cents PER LINEAR FOOT	85 LF		
6	4-ft Diameter Catch Basin with Frame and Grate @ _____ _____ Dollars and _____Cents PER EACH	1 EA		
7	8'x8' Transition Structure with Frame and Cover @ _____ _____ Dollars and _____Cents PER EACH	1 EA		

Item No.	Item Description with Unit or Lump Sum Price in Written Words	Estimated Quantity & Unit	Unit Bid Price (Figures)	Total Bid Item Price (Figures)
8	24"x78" Precast Concrete Box Culvert @ _____ _____ Dollars and _____Cents PER LINEAR FOOT	89 LF		
9	Headwall @ _____ _____ Dollars and _____Cents PER EACH	1 EA		
10	Precast Concrete Curb @ _____ _____ Dollars and _____Cents PER LINEAR FOOT	386 LF		
11	Cement Concrete Sidewalk @ _____ _____ Dollars and _____Cents PER SQUARE YARD	134 SY		
12	Rip-Rap Protection @ _____ _____ Dollars and _____Cents PER SQUARE YARD	15 SY		
13	Wooden Guardrail @ _____ _____ Dollars and _____Cents PER LINEAR FOOT	40 LF		
14	Pre-cast Concrete Wheel Stops @ _____ _____ Dollars and _____Cents PER EACH	13 EA		
15	6- inch Bollards @ _____ _____ Dollars and _____Cents PER EACH	6 EA		
16	Permeable Pavement @ _____ _____ Dollars and _____Cents PER SQUARE YARD	893 SY		

Item No.	Item Description with Unit or Lump Sum Price in Written Words	Estimated Quantity & Unit	Unit Bid Price (Figures)	Total Bid Item Price (Figures)
17	Permeable Pavement Sub-Base @ _____ _____ Dollars and _____Cents PER CUBIC YARD	239 CY		
18	Erosion Controls @ _____ _____ Dollars and _____Cents PER LINEAR FOOT	261 LF		
19	Regulatory Signs and Posts @ _____ _____ Dollars and _____Cents PER EACH	4 EA		
20	Bituminous Concrete Binder Course @ _____ _____ Dollars and _____Cents PER SQUARE YARD	51 SY		
21	Bituminous Concrete Wear Course @ _____ _____ Dollars and _____Cents PER SQUARE YARD	51 SY		
22	Processed Aggregate Sub-Base @ _____ _____ Dollars and _____Cents PER CUBIC YARD	22 CY		
23	Pavement Markings @ _____ _____ Dollars and _____Cents LUMP SUM	1 LS		
24	Abandon Existing 15” RCP @ _____ _____ Dollars and _____Cents PER EACH	1 EA		
25	2” Water Service @ _____ _____ Dollars and _____Cents PER LINEAR FOOT	79 LF		

Item No.	Item Description with Unit or Lump Sum Price in Written Words	Estimated Quantity & Unit	Unit Bid Price (Figures)	Total Bid Item Price (Figures)
26	2" Curb Stop @ _____ _____ Dollars and _____Cents PER EACH	1 EA		
27	2" Corporation Stop & Tap @ _____ _____ Dollars and _____Cents PER EACH	1 EA		
28	Water Tap on Wooden Post with Lock @ _____ _____ Dollars and _____Cents PER EACH	1 EA		
29	Electric Pull Box with Frame and Cover @ _____ _____ Dollars and _____Cents PER EACH	1 EA		
30	Concrete Encased Electrical Conduit @ _____ _____ Dollars and _____Cents PER LINEAR FOOT	53 LF		
31	Sand Encased Electrical Conduit @ _____ _____ Dollars and _____Cents PER LINEAR FOOT	348 LF		
32	Light Pole Foundation @ _____ _____ Dollars and _____Cents PER EACH	4 EA		
33	Accessible Curb Ramp @ _____ _____ Dollars and _____Cents PER EACH	2 EA		
34	Wetland Restoration @ _____ _____ Dollars and _____Cents PER SQUARE YARD	57 SY		

Item No.	Item Description with Unit or Lump Sum Price in Written Words	Estimated Quantity & Unit	Unit Bid Price (Figures)	Total Bid Item Price (Figures)
35	Landscaping @ Thirty thousand Dollars and Zero Cents	1 Contingency	$30,000	$30,000
36	Mobilization and Demobilization @ _____ _____ Dollars and _____Cents PER LUMP SUM	1 LS		

END OF SECTION

SECTION 00 43 22.01

UNIT PRICES FORM FOR ADDITIONAL WORK

A. Include a separate price for each item for Additional Work described below.

B. These prices will be used in determining responsiveness, but will not be used in evaluating Bidder's Bid price. These prices will be included in the Agreement for Contract Price Modifications for the items listed, separate from and not included in the Total Contract Price.

C. Provide unit pricing for each Contract Price Modification item in both words and figures. Provide Contract Price Modification Bid item totals in figures. Discrepancies between prices written in words and prices written in figures will be resolved in favor of prices written in words. Discrepancies between the multiplication of estimated quantities and unit prices will be resolved in favor of the unit prices.

CONTRACT PRICE MODIFICATION 2 – ROUTE 153 MODIFICATIONS AS DEPICTED ON THE DRAWINGS

CMP Item No.	Item Description with Unit or Lump Sum Price in Written Words	Estimated Quantity & Unit	Unit Bid Price (Figures)	Total Bid Item Price (Figures)
1a	Clearing and Grubbing @ _____ _____ Dollars and _____Cents PER SQUARE YARD	127 SY		
1b	Remove and Relocate Signs and Posts @ _____ _____ Dollars and _____Cents PER EACH	1 EA		
1c	Remove and Dispose Tree @ _____ _____ Dollars and _____Cents PER EACH	1 EA		
1d	Remove and Dispose Curb @ _____ _____ Dollars and _____Cents PER LINEAR FOOT	154 LF		
1e	Cast-In-Place Concrete Curb @ _____ _____ Dollars and _____Cents PER LINEAR FOOT	134 LF		

CMP Item No.	Item Description with Unit or Lump Sum Price in Written Words	Estimated Quantity & Unit	Unit Bid Price (Figures)	Total Bid Item Price (Figures)
1f	Pavement Markings @ _____ _____ Dollars and _____Cents PER LUMP SUM	1 LS		
1g	Mill @ _____ _____ Dollars and _____Cents PER SQUARE YARD	31 SY		
1h	Concrete Sidewalk @ _____ _____ Dollars and _____Cents PER SQUARE YARD	67 SY		
1i	Bituminous Concrete Binder Course @ _____ _____ Dollars and _____Cents PER SQUARE YARD	60 SY		
1j	Bituminous Concrete Wear Course @ _____ _____ Dollars and _____Cents PER SQUARE YARD	133 SY		
1k	Processed Aggregate Sub-Base @ _____ _____ Dollars and _____Cents PER CUBIC YARD	20 CY		

END OF SECTION

SECTION 00 43 93

BID SUBMITTAL CHECKLIST

Bidder confirms that the following documents are fully completed, included in and made part of its Bid.

- ☐ 00 41 01 Bid Form
- ☐ 00 43 13 Bid Bond – Penal Sum Form

Supplements

- ☐ 00 45 05 Bidder's Representations and Certifications
  - ☐ including required documents and submittals
- ☐ 00 45 13 Bidder's Qualifications
- ☐ 00 45 19 Non-collusion Affidavit
- ☐ One original signed hardcopy (with original Bid security) and 2 copies has been submitted to the Owner in accordance with Section 00 21 13.

CONFIRMED BY BIDDER ON:
By:
Authorized person per Bid Form

END OF SECTION

This page intentionally left blank

SECTION 00 45 05

BIDDER'S REPRESENTATIONS AND CERTIFICATIONS

The undersigned, under the penalties of perjury, represents and certifies the following which is made a condition of the Bid.

1.01 Bidder's Representations

A. Bidder has examined and carefully studied the Bidding Documents and other related data identified in the Bidding Documents.

B. Bidder has visited the Site and become familiar with and is satisfied as to the general, local, and Site conditions that may affect cost, progress, and performance of the Work.

C. Bidder is familiar with and is satisfied as to all Laws and Regulations that may affect cost, progress, and performance of the Work.

D. Bidder has carefully studied all: (1) reports of explorations and tests of subsurface conditions at or contiguous to the Site and all drawings of physical conditions relating to existing surface or subsurface structures at the Site (except Underground Facilities) that have been identified in Section 00 73 10 of the Supplementary Conditions Paragraph 4.02 as containing reliable "technical data," and (2) reports and drawings of Hazardous Environmental Conditions, if any, at the Site that have been identified in Section 00 73 10 of the Supplementary Conditions Paragraph 4.06 as containing reliable "technical data."

E. Bidder has considered the information known to Bidder; information commonly known to contractors doing business in the locality of the Site; information and observations obtained from visits to the Site; the Bidding Documents; and the Site-related reports and drawings identified in the Bidding Documents, with respect to the effect of such information, observations, and documents on (1) the cost, progress, and performance of the Work; (2) the means, methods, techniques, sequences, and procedures of construction to be employed by Bidder, including applying the specific means, methods, techniques, sequences, and procedures of construction expressly required by the Bidding Documents; and (3) Bidder's safety precautions and programs.

F. Based on the information and observations referred to in Paragraph E above, Bidder does not consider that further examinations, investigations, explorations, tests, studies, or data are necessary for the determination of the Bid for performance of the Work at the price(s) bid and within the times required, and in accordance with the other terms and conditions of the Bidding Documents.

G. Bidder is aware of the general nature of work to be performed by Owner and others at the Site that relates to the Work as indicated in the Bidding Documents.

H. Bidder has given Owner written notice of all conflicts, errors, ambiguities, or discrepancies that Bidder has discovered in the Bidding Documents, and the written resolution thereof by Owner is acceptable to Bidder.

I. The Bidding Documents are generally sufficient to indicate and convey understanding of all terms and conditions for the performance of the Work for which the Bid is submitted.

1.02 Bidder's Certifications

A. The Bid is genuine and not made in the interest of or on behalf of any undisclosed individual or entity and is not submitted in conformity with any collusive agreement or rules of any group, association, organization, or corporation.

B. Bidder has not directly or indirectly induced or solicited any other Bidder to submit a false or sham Bid and has not solicited or induced any individual or entity to refrain from bidding.

C. Bidder has not engaged in corrupt, fraudulent, collusive, or coercive practices in competing for the Contract. For the purposes of this Paragraph:

1. "corrupt practice" means the offering, giving, receiving, or soliciting of anything of value likely to influence the action of a public official in the bidding process;

2. "fraudulent practice" means an intentional misrepresentation of facts made (a) to influence the bidding process to the detriment of Owner, (b) to establish Bid prices at artificial non-competitive levels, or (c) to deprive Owner of the benefits of free and open competition;

3. "collusive practice" means a scheme or arrangement between two or more Bidders, with or without the knowledge of Owner, a purpose of which is to establish Bid prices at artificial, non-competitive levels; and

4. "coercive practice" means harming or threatening to harm, directly or indirectly, persons or their property to influence their participation in the bidding process or affect the execution of the Contract.

D. Bidder will comply with the requirements of the Safety and Health provisions in the Contract Documents, and if Bidder is awarded a Contract, it shall incorporate these provisions into all subcontracts and Purchase Orders so that such provisions will be binding upon each Subcontractor or Supplier.

E. Bidder will comply with the requirements of the Equal Employment Opportunity, Anti-discrimination, and Affirmative Action Program provisions in the Contract Documents, if any, and if Bidder is awarded a Contract, it shall incorporate these provisions into all subcontracts and Purchase Orders so that such provisions will be binding upon each Subcontractor or Supplier.

1.03 Bidder's Certifications Pursuant to Connecticut General Statutes (CGS) and Municipal Codes and Ordinances

A. Debarment

1. Pursuant to CGS §31-53a, Bidder certifies it is eligible to bid and enter into a Contract, and is not on the list maintained by the Labor Commissioner (debarment list) naming persons and firms found to have disregarded its obligations under CGS § 31-53 and 31-76c to employees and subcontractors on public works contracts or to have been de-barred from bidding on or entering into a federal contract in accordance with the provisions of the Davis-Bacon Act, or any firm, corporation, partnership, or association in which such persons or firms have an interest, until a period of up to three years.

2. If deemed the Successful Bidder, Bidder certifies it will not award a subcontract to any Subcontractor appearing on the debarment list and will require each Subcontractor to submit a sworn affidavit attesting that such person, firm, corporation, partnership or association does not hold an interest of ten per cent or greater in a firm appearing on the debarment list.

B. Resident Bidder or non-resident verified Bidder certifies it has submitted for itself and resident Subcontractors and non-resident verified Subcontractors, the Status Letter (Letter of Good Standing) from the Department of Revenue Services. Non-resident Bidder who is unverified, certifies for itself and its Subcontractors who are unverified, that it will comply with the requirements of CGS §12-430 and provide the required bond per Section 00 73 73.

C. Bidder certifies no amounts for Connecticut sales and use taxes have been included in the Bid.

D. Bidder certifies that all employees to be employed at the Work Site will have successfully completed an OSHA 10 hour construction safety program or complied with other requirements for safety in Section 00 73 73. If Bidder is awarded a Contract, Bidder certifies it shall furnish documentation of successful completion

of said course with the first certified payroll report for each employee in accordance with Section 00 73 73.

1.04 Funding Requirements

A. Bidder certifies it has submitted a signed Bidder Contract Compliance Monitoring Report (included in 00 22 13) as part of its Bid and shall comply with the requirements included in Section 00 73 78 for public works contracts with State funding.

☐ Bidder certifies it has or will file an affirmative action plan for approval by the Commission on Human Rights and Opportunities (CHRO) prior to award of a Contract in compliance with CGS §46a-68d.

OR

☐ Bidder has submitted its affirmative action plan approved by CHRO with its Bid.

SUBMITTED ON:
By:
Authorized person per Bid Form

END OF SECTION

SECTION 00 45 13

BIDDER'S QUALIFICATIONS

The following data, statements of experience, personnel, equipment and general qualifications of the Bidder are submitted as a part of the Bid and the Bidder represents and guarantees the truthfulness and accuracy thereof and **its ability to meet the qualifications requirements specified forth in the General Requirements**. Attach additional sheets as necessary properly cross referenced.

A. Bidder's organization is a _____ (entity type) and has been in business continuously from the year _____.

B. Bidder's organization has had experience in construction comparable to that required by the Contract Documents as a prime contractor for _____ years and as a subcontractor for _____ years.
COVERED IN 004505

C. Following is a list of **at least five (5) projects** Bidder's organization has completed **in the state the Project is located, within the last two (2) years which are similar** in type, character and magnitude to that required by the Contract.

Client/Owner Name/Address	Project Name/Location	CURRENT Contact Name, Phone, Email	Time Period

D. Following is a list of safety citations issued over the last three (3) years to the Bidder, firm, corporation, partnership or association in which it has interest.

Name of Client and Project	Contact Name/ Telephone No.	Type of Citation	Issued by

E. Following is a list of all projects Bidder has undertaken in the last ten (10) years which have resulted in partial or final settlement of the contract by arbitration or litigation.

Name of Client and Project	Contact Name/ Telephone No.	Original Contract Amount	Total Claims	Arbitrated or Litigated Amount of Settlement of Claims

F. Following is a list of violations Bidder has been the subject of, or otherwise been involved in, regarding any state or local ethic laws, regulation, code, ordinance, policy, or standard, or offenses arising out of submission of bids or the performance of work on public works projects or contracts. Attach additional sheets as necessary.

Name and Location of the Project	
Nature of the Violation/Offense	
Duration and dates during which the violation/offense took place	
Name and Location of the Project	
Nature of the Violation/Offense	
Duration and dates during which the violation/offense took place	
Name and Location of the Project	
Nature of the Violation/Offense	
Duration and dates during which the violation/offense took place	
Name and Location of the Project	
Nature of the Violation/Offense	
Duration and dates during which the violation/offense took place	

END OF SECTION

This page intentionally left blank.

SECTION 00 45 19

NON-COLLUSION AFFIDAVIT

_____, being duly sworn, depose and, under the penalty of perjury, say that the following is true:

1. I am the person responsible within my firm for the final decision as to the price(s) and amount of this Bid or, if not, that I have written authorization, enclosed herewith, from that person to make the statements set out below on his or her behalf and on the behalf of my firm.

2. The price(s) and amount of this Bid have been arrived at independently, without collusion, consultation, communication, or agreement for the purpose of restricting competition with any other contractor, competitor, Bidder, or potential Bidder.

3. Unless otherwise required by law, neither the price(s) nor the amount of this Bid have been disclosed to any other firm or person who is a Bidder, competitor, or potential Bidder on the Project, and will not be so disclosed either directly or indirectly prior to Bid opening.

4. No attempt has been made or will be made to solicit, cause, or induce any firm, partnership, corporation, or person to submit or not submit a Bid on this Project, or to submit a Bid higher than the Bid of this firm, or submit an intentionally high or noncompetitive Bid or other form of complementary Bid, or for the purpose of restricting competition.

5. The Bid of my firm is made in good faith and not pursuant to any agreement or discussion with, or inducement from, any firm or person to submit a complementary Bid.

6. My firm has not offered or entered into a subcontracting agreement regarding the purchase of materials or services from any firm or person, or offered, promised, or paid cash or anything of value to any firm or person, whether in connection with this or any other Project, in consideration for an agreement or promise by any firm or person to refrain from proposing or to submit a complementary Bid on the Project.

7. My firm has not accepted nor been promised any subcontract or agreement regarding the sale of materials or services to any firm or person, and has not been promised or paid cash or anything of value to any firm or person, whether in connection with this or any other project, in consideration for my firm's submitting a complementary Bid or agreeing to do so, on the Project.

8. I have made a diligent inquiry of all members, officers, employees, and agents of my firm with responsibilities relating to the preparation, approval, or submission of my firm's Bid on the Project and have been advised by each of them that he or she has not participated in any communication, consultation, discussion, agreement, collusion, act, or other conduct inconsistent with any of the statements and representations made in this affidavit.

_____
Company Name

_____
Signature

_____
Company Position

Date: _____

Attest: _____

Date: _____

END OF SECTION

SAMPLE NOTICE OF INTENT TO AWARD (C-00 50 55)

Date:

Project: Town Center Parking Improvement Project

Owner: Town of Westbrook, Connecticut Land Use Office

Owner's Contract No.:

Bidder:

Bidder's Address:

You are notified that your Bid dated _____ for the above Contract has been considered. You are the Successful Bidder and it is intended that a Contract for the Town Center Parking Improvement Project will be awarded to you subject to required reviews and approvals.

Subject to the above, a formal Notice of Award will be sent which will require you to comply with certain conditions **within 10 days** of the date you receive the Notice of Award, including, but not limited to the following.

1. Delivering the Contract security (Bonds) as specified in the General Conditions and Supplementary Conditions (Articles 2 and 5); and
2. Delivering the insurance certificates indicating coverages as specified in the General Conditions and Supplementary Conditions (Articles 2 and 5).
3. Delivering the following completed and executed certifications and documents:
    a. Contractors Wage Certification Form
    b. Written non-discrimination certification for the Commission on Human Rights and Opportunities using the forms attached which can be found at:

        http://www.ct.gov/opm/cwp/view.asp?a=2982&q=390928&opmNavGID=1806

    c. Affirmative action plan approved by CHRO if available and not already submitted with Bid
    d. Items to be provided by Subcontractors:
        i. Letter of Good Standing from the CT Department of Revenue Services with respect to all returns due and taxes per Section 00 22 13
        ii. Certification from the CT Secretary of State for foreign corporations per Section 00 22 13, if applicable

After you comply with the conditions of the Notice of Award and required reviews and approvals are obtained, Owner will thereafter deliver the conformed Contract Documents for execution.

Town of Westbrook Land Use Office
Owner

_____
Authorized Signature

Meg Parulis – Town Planner
Name & Title

SAMPLE NOTICE OF AWARD (C-00 51 00)

Date:

Project: Town Center Parking Improvement Project

Owner: Town of Westbrook, Connecticut Land Use Office

Owner's Contract No.:

Bidder:

Bidder's Address:

You are notified that your Bid dated _____ for the above Contract has been considered. You are the Successful Bidder and are awarded a Contract for the Town Center Parking Improvement Project subject to the following conditions being met and subject to required reviews and approvals.

The Total Contract Price of your Contract is _____ Dollars ($_____).

You must comply with the following conditions precedent **within 10 days** of the date you receive this Notice of Award.

1. Deliver the Contract security (Bonds) as specified in the General Conditions and Supplementary Conditions (Articles 2 and 5); and
2. Deliver the insurance certificates indicating coverages as specified in the General Conditions and Supplementary Conditions (Articles 2 and 5).
3. Delivering the following completed and executed certifications and documents:
    a. Contractors Wage Certification Form
    b. Written non-discrimination certification for the Commission on Human Rights and Opportunities using the forms attached which can be found at:

        http://www.ct.gov/opm/cwp/view.asp?a=2982&q=390928&opmNavGID=1806

    c. Affirmative action plan approved by CHRO if available and not already submitted with Bid
    d. Items to be provided by Subcontractors:
        i. Letter of Good Standing from the CT Department of Revenue Services with respect to all returns due and taxes per Section 00 22 13
        ii. Certification from the CT Secretary of State for foreign corporations per Section 00 22 13, if applicable

Failure to comply with the above conditions within the time specified will entitle the Owner to consider you in default, annul this Notice of Award, and declare your Bid security forfeited.

After confirming that you have complied with the above conditions and required approvals are obtained, Owner will deliver the conformed Contract Documents for execution.

Town of Westbrook Land Use Office
Owner

_____
Authorized Signature

Meg Parulis – Town Planner
Name & Title

SECTION 00 52 10

AGREEMENT FORM

THIS AGREEMENT is by and between the Town of Westbrook, Connecticut ("Owner") and _____ ("Contractor"). Owner and Contractor hereby agree as follows

ARTICLE 1 – WORK

1.01 Contractor shall complete all Work as specified or indicated in the Contract Documents. The Work is generally described as clearing portions of the Site to be developed, construction of permeable pavement access drives and parking, landscaped areas, a Stormwater Management System, lighting, electrical and water service; and all materials and equipment, services and construction inherent to the Work.

ARTICLE 2 – THE PROJECT

2.01 The Project under the Contract Documents is generally described as "Town Center Parking Improvement Project".

ARTICLE 3 – ENGINEER

3.01 The Project has been designed by Woodard & Curran, Inc. (Engineer), which is to act as Owner's representative, assume all duties and responsibilities, and have the rights and authority assigned to Engineer in the Contract Documents in connection with the completion of the Work in accordance with the Contract Documents.

ARTICLE 4 – CONTRACT TIMES

4.01 *Time of the Essence*

A. All time limits for Milestones, if any, Substantial Completion, and completion and readiness for final payment as stated in the Contract Documents are of the essence of the Contract.

Based on EJCDC C-520. Revised by Woodard & Curran on behalf of and as approved by Owner
Copyright © 2007 Prepared by National Society of Professional Engineers for EJCDC. All rights reserved.

4.02 *Liquidated Damages*

A. Contractor and Owner recognize that time is of the essence as stated in Paragraph 4.01 above and that Owner will suffer financial loss if the Work is not completed within the times specified in Paragraph 4.02 above, plus any extensions thereof allowed in accordance with Article 12 of the Standard General Conditions and Supplementary Conditions, if any. The parties also recognize the delays, expense, and difficulties involved in proving in a legal or arbitration proceeding the actual loss suffered by Owner if the Work is not completed on time. Accordingly, instead of requiring any such proof, Owner and Contractor agree that as liquidated damages for delay (but not as a penalty), Contractor shall pay Owner **$200** for each day that expires after the time specified in Paragraph 4.02 above for Substantial Completion until the Work is substantially complete. After Substantial Completion, if Contractor shall neglect, refuse, or fail to complete the remaining Work within the Contract Time or any proper extension thereof granted by Owner, Contractor shall pay Owner **$200** for each day that expires after the time specified in Paragraph 4.02 above for completion and readiness for final payment until the Work is completed and ready for final payment.

4.03 *Actual Damages*

A. The Contractor shall provide complete bypass of the drainage system and tidal wetlands during construction. Contractor shall pay actual damages incurred by Owner for Contractor's failure to maintain bypass, resulting in damages related thereto.

ARTICLE 5 – CONTRACT PRICE

5.01 Owner shall pay Contractor for completion of the Work in accordance with the Contract Documents an amount in current funds as follows:

TOTAL BID PRICE (based on Unit Prices Form)
[IN WORDS] Dollars and [#OF CENTS] Cents $[DOLLAR AMOUNT]

A. Unit Prices have been computed in accordance with Paragraph 11.03.A of the Standard General Conditions and Supplementary Conditions, if any.

B. The prices for Unit Price Work set forth as of the Effective Date of the Agreement are based on estimated quantities. As provided in Paragraph 11.03 of the Standard General Conditions and Supplementary Conditions, if any, estimated quantities are not guaranteed (except for those that may be estimated by the Contractor), and determinations of actual quantities and classifications are to be made by Engineer as provided in Paragraph 9.07 of the Standard General Conditions and Supplementary Conditions, if any. Final payment for unit price items will be based on actual quantities determined and based on the unit prices in the Bid Form included in Section 00 41 01.

Based on EJCDC C-520. Revised by Woodard & Curran on behalf of and as approved by Owner
Copyright © 2007 Prepared by National Society of Professional Engineers for EJCDC. All rights reserved.

5.02 *Adjustments to the Contract Price*

Adjustments to the Contract Price for additional Work will be at the prices shown in the Bid Form included in Section 00 41 01. Contract Price Adjustments may be applied at Owner's option in accordance with price adjustment clauses included in the General Conditions, Article 12.

A. Unit Prices have been computed in accordance with Paragraph 11.03.A of the Standard General Conditions and Supplementary Conditions, if any.

B. The prices for Unit Price Additional Work set forth as of the Effective Date of the Agreement are based on estimated quantities. As provided in Paragraph 11.03 of the Standard General Conditions and Supplementary Conditions, if any, estimated quantities are not guaranteed (except for those that may be estimated by the Contractor), and determinations of actual quantities and classifications are to be made by Engineer as provided in Paragraph 9.07 of the Standard General Conditions and Supplementary Conditions, if any. Final payment for unit price items will be based on actual quantities determined and based on the unit prices in the Bid Form included in Section 00 41 01.

ARTICLE 6 – PAYMENT PROCEDURES

6.01 *Submittal and Processing of Payments*

A. Contractor shall submit Applications for Payment in accordance with Article 14 of the Standard General Conditions and Supplementary Conditions, if any. Applications for Payment will be processed by Engineer as provided in the Standard General Conditions and Supplementary Conditions, if any, and the General Requirements.

6.02 *Progress Payments; Retainage*

A. Owner shall make progress payments on account of the Contract Price on the basis of Contractor's Applications for Payment on or about the 1ST day of each month during performance of the Work as provided in Paragraph 6.02.A.1 below. All such payments will be measured by the schedule of values established as provided in Paragraph 2.07.A of the Standard General Conditions and Supplementary Conditions, if any, (and in the case of Unit Price Work based on the number of units completed).

1. Prior to Substantial Completion, progress payments will be made in an amount equal to the percentage indicated below but, in each case, less the aggregate of payments previously made and less such amounts as Engineer may determine or Owner may withhold, including but not limited to liquidated damages, in accordance with Paragraph 14.02 of the Standard General Conditions and Supplementary Conditions, if any, and additional retainage allowed by Laws and Regulations.

   a. Progress Payments of 95 percent for Work completed (with the balance of 5 percent being retainage); and

Based on EJCDC C-520. Revised by Woodard & Curran on behalf of and as approved by Owner
Copyright © 2007 Prepared by National Society of Professional Engineers for EJCDC. All rights reserved.

b. 95 percent of cost of materials and equipment not incorporated in the Work (with the balance of 5 percent being retainage).

2. Upon Substantial Completion, Owner shall pay an amount sufficient to increase total payments to Contractor to 95 percent of the Work completed (with the balance of 5 percent being retainage), less such amounts as Engineer shall determine in accordance with Paragraph 14.02.B.5 of the General and Supplementary Conditions, if any, and less the Engineer's estimate of the value of Work to be completed or corrected as shown on the tentative list of items to be completed or corrected (Punch List) attached to the certificate of Substantial Completion and subject to Paragraph 14.04 of the General and Supplementary Conditions, if any.

6.03 *Final Payment*

A. Upon final completion and acceptance of the Work in accordance with Paragraph 14.07 of the General and Supplementary Conditions, if any, Owner shall pay the remainder of the Contract Price as recommended by Engineer as provided in said Paragraph 14.07.

ARTICLE 7 – INTEREST

7.01 All moneys not paid when due as provided in Article 14 of the General and Supplementary Conditions, if any, shall bear interest comparable to current short term lending rates in the state where the Project is located or allowed by Laws and Regulations. Interest shall not be accrued on retainage.

ARTICLE 8 – CONTRACTOR'S REPRESENTATIONS AND CERTIFICATIONS

8.01 In order to induce Owner to enter into this Agreement, Contractor makes the following representations:

A. Contractor has examined and carefully studied the Contract Documents and the other related data identified in the Bidding Documents.

B. Contractor has visited the Site and become familiar with and is satisfied as to the general, local, and Site conditions that may affect cost, progress, and performance of the Work.

C. Contractor is familiar with and is satisfied as to all federal, state, and local Laws and Regulations that may affect cost, progress, and performance of the Work.

D. Contractor has carefully studied all: (1) reports of explorations and tests of subsurface conditions at or contiguous to the Site and all drawings of physical conditions relating to existing surface or subsurface structures at the Site (except Underground Facilities), if any, that have been identified in Paragraph SC-4.02 of the Supplementary Conditions as containing reliable "technical data," and (2) reports and drawings of Hazardous Environmental Conditions, if any, at the Site that have been identified in Paragraph SC-4.06 of the Supplementary Conditions as containing reliable "technical data."

Based on EJCDC C-520. Revised by Woodard & Curran on behalf of and as approved by Owner
Copyright © 2007 Prepared by National Society of Professional Engineers for EJCDC. All rights reserved.

E. Contractor has considered the information known to Contractor; information commonly known to contractors doing business in the locality of the Site; information and observations obtained from visits to the Site; the Contract Documents; and the Site-related reports and drawings identified in the Contract Documents, with respect to the effect of such information, observations, and documents on (1) the cost, progress, and performance of the Work; (2) the means, methods, techniques, sequences, and procedures of construction to be employed by Contractor, including any specific means, methods, techniques, sequences, and procedures of construction expressly required by the Contract Documents; and (3) Contractor's safety precautions and programs.

F. Based on the information and observations referred to in Paragraph 8.01.E above, Contractor does not consider that further examinations, investigations, explorations, tests, studies, or data are necessary for the performance of the Work at the Contract Price, within the Contract Times, and in accordance with the other terms and conditions of the Contract Documents.

G. Contractor is aware of the general nature of work to be performed by Owner and others at the Site that relates to the Work as indicated in the Contract Documents.

H. Contractor has given Engineer written notice of all conflicts, errors, ambiguities, or discrepancies that Contractor has discovered in the Contract Documents, and the written resolution thereof by Engineer is acceptable to Contractor.

I. The Contract Documents are generally sufficient to indicate and convey understanding of all terms and conditions for performance and furnishing of the Work.

8.02 The Contractor certifies, under the penalties of perjury, that:

A. Contractor has not engaged in corrupt, fraudulent, collusive, or coercive practices in competing for or in executing the Contract. For the purposes of this Paragraph:

1. "corrupt practice" means the offering, giving, receiving, or soliciting of anything of value likely to influence the action of a public official in the bidding process or in the Contract execution;

2. "fraudulent practice" means an intentional misrepresentation of facts made (a) to influence the bidding process or the execution of the Contract to the detriment of Owner, (b) to establish Bid or Contract prices at artificial non-competitive levels, or (c) to deprive Owner of the benefits of free and open competition;

3. "collusive practice" means a scheme or arrangement between two or more Bidders, with or without the knowledge of Owner, a purpose of which is to establish Bid prices at artificial, non-competitive levels; and

4. "coercive practice" means harming or threatening to harm, directly or indirectly, persons or their property to influence their participation in the bidding process or affect the execution of the Contract.

Based on EJCDC C-520. Revised by Woodard & Curran on behalf of and as approved by Owner
Copyright © 2007 Prepared by National Society of Professional Engineers for EJCDC. All rights reserved.

B. Whereas the Project is funded in part with State funds under the Small Town Economic Assistance Program (STEAP), the Contractor agrees and warrants that in the performance of the Contract, Contractor will comply with requirements for municipally held public works contracts utilizing funds of the State of Connecticut including those set forth in Section 00 73 78.

C. Per CGS §46a-68d, unless Contractor has submitted an affirmative action plan approved by CHRO, Owner shall withhold 2% of the total contract price per month from any payment made to Contractor until such time as Contractor has received approval of its affirmative action plan from the CHRO or Owner receives notification from CHRO to release such retainage based on CHRO's temporary policy effective January 1, 2015 (included in Section 00 73 78).

D. Contractor will incorporate the applicable provisions of the Contract Documents into all subcontracts and Purchase Orders so that such provisions will be binding upon each Subcontractor or Supplier.

ARTICLE 9 – CONTRACT DOCUMENTS

9.01 *Contents*

A. The Contract Documents consist of the following:

1. This Agreement
2. Items listed in Section 00 54 00
3. Forms listed in 00 60 00
4. Standard General Conditions in Section 00 72 05
5. Supplementary Conditions listed in Section 00 73 05
6. General Requirements, Specifications and Drawings as listed in the table of contents of the Contract Documents
7. The following which may be delivered or issued on or after the Effective Date of the Agreement and are not attached hereto:
   a. Notice to Proceed
   b. Work Change Directives
   c. Change Orders

B. The documents listed in Paragraph 9.01.A are attached to this Agreement and made a part hereof.

C. There are no Contract Documents other than those listed above in this Article 9.

Based on EJCDC C-520. Revised by Woodard & Curran on behalf of and as approved by Owner
Copyright © 2007 Prepared by National Society of Professional Engineers for EJCDC. All rights reserved.

D. The Contract Documents may only be amended, modified, or supplemented as provided in Paragraph 3.04 of the Standard General Conditions and Supplementary Conditions, if any.

ARTICLE 10 – MISCELLANEOUS

10.01 *Terms*

A. Terms used in this Agreement will have the meanings stated in the Standard General Conditions and Supplementary Conditions, if any.

10.02 *Assignment of Contract*

A. No assignment by a party hereto of any rights under or interests in the Contract will be binding on another party hereto without the written consent of the party sought to be bound; and, specifically but without limitation, moneys that may become due and moneys that are due may not be assigned without such consent (except to the extent that the effect of this restriction may be limited by law), and unless specifically stated to the contrary in any written consent to an assignment, no assignment will release or discharge the assignor from any duty or responsibility under the Contract Documents.

10.03 *Successors and Assigns*

A. Owner and Contractor each binds itself, its partners, successors, assigns, and legal representatives to the other party hereto, its partners, successors, assigns, and legal representatives in respect to all covenants, agreements, and obligations contained in the Contract Documents.

10.04 *Severability*

A. Any provision or part of the Contract Documents held to be void or unenforceable under any Law or Regulation shall be deemed stricken, and all remaining provisions shall continue to be valid and binding upon Owner and Contractor, who agree that the Contract Documents shall be reformed to replace such stricken provision or part thereof with a valid and enforceable provision that comes as close as possible to expressing the intention of the stricken provision.

Based on EJCDC C-520. Revised by Woodard & Curran on behalf of and as approved by Owner
Copyright © 2007 Prepared by National Society of Professional Engineers for EJCDC. All rights reserved.

IN WITNESS WHEREOF, Owner and Contractor have signed this Agreement. Counterparts have been delivered to Owner and Contractor. All portions of the Contract Documents have been signed or have been identified by Owner and Contractor or on their behalf.

This Agreement will be effective on _____ (which is the Effective Date of the Agreement).

OWNER:
Town of Westbrook, Connecticut

By:
Printed Name
Title

By:
Printed Name
Title

Attest:
Title
Address for giving notices:

(If Owner is a corporation, attach evidence of authority to sign. If Owner is a public body, attach evidence of authority to sign and resolution or other documents authorizing execution of this Agreement.)

CONTRACTOR:

By:
Printed Name
Title

License No.

Attest:
Title
Address for giving notices:

Agent for service of process:

(If Contractor is a corporation, a partnership, or a joint venture, attach evidence of authority to sign.)

Based on EJCDC C-520. Revised by Woodard & Curran on behalf of and as approved by Owner
Copyright © 2007 Prepared by National Society of Professional Engineers for EJCDC. All rights reserved.

SECTION 00 54 00

AGREEMENT FORM SUPPLEMENTS

The following items included in this Section are attached to and are incorporated into the Agreement and made a part thereof.

TO BE COMPLETED AFTER AWARD LISTING ITEMS FROM SUCCESSFUL BIDDER

- Bid Form
- Performance Bond
- Payment Bond

- **Certifications**
  - Status Letter (Letter of Good Standing) from the Department of Revenue Services
  - Contractor's Wage Certification Form
  - Written non-discrimination certification for the Commission on Human Rights and Opportunities
  - Affirmative action plan approved by CHRO
  - Subcontractor Status Letter (Letter of Good Standing) from the Department of Revenue Services

END OF SECTION

This page intentionally left blank

EJCDC
ENGINEERS JOINT CONTRACT DOCUMENTS COMMITTEE

PERFORMANCE BOND (Form C-006113.13

CONTRACTOR *(name and address)*:

SURETY *(name and address of principal place of business)*:

OWNER *(name and address)*:

CONSTRUCTION CONTRACT
Effective Date of the Agreement:
Amount:
Description *(name and location)*:

BOND
Bond Number:
Date *(not earlier than the Effective Date of the Agreement of the Construction Contract)*:
Amount:
Modifications to this Bond Form: ☐ None ☐ See Paragraph 16

Surety and Contractor, intending to be legally bound hereby, subject to the terms set forth below, do each cause this Performance Bond to be duly executed by an authorized officer, agent, or representative.

CONTRACTOR AS PRINCIPAL

_____ *(seal)*
Contractor's Name and Corporate Seal

By: _____
Signature

_____
Print Name

_____
Title

Attest:_____
Signature

_____
Title

SURETY

_____ *(seal)*
Surety's Name and Corporate Seal

By:_____
Signature *(attach power of attorney)*

_____
Print Name

_____
Title

Attest:_____
Signature

_____
Title

Notes: (1) Provide supplemental execution by any additional parties, such as joint venturers. (2) Any singular reference to Contractor, Surety, Owner, or other party shall be considered plural where applicable.

1. The Contractor and Surety, jointly and severally, bind themselves, their heirs, executors, administrators, successors, and assigns to the Owner for the performance of the Construction Contract, which is incorporated herein by reference.

2. If the Contractor performs the Construction Contract, the Surety and the Contractor shall have no obligation under this Bond, except when applicable to participate in a conference as provided in Paragraph 3.

3. If there is no Owner Default under the Construction Contract, the Surety's obligation under this Bond shall arise after:

3.1 The Owner first provides notice to the Contractor and the Surety that the Owner is considering declaring a Contractor Default. Such notice shall indicate whether the Owner is requesting a conference among the Owner, Contractor, and Surety to discuss the Contractor's performance. If the Owner does not request a conference, the Surety may, within five (5) business days after receipt of the Owner's notice, request such a conference. If the Surety timely requests a conference, the Owner shall attend. Unless the Owner agrees otherwise, any conference requested under this Paragraph 3.1 shall be held within ten (10) business days of the Surety's receipt of the Owner's notice. If the Owner, the Contractor, and the Surety agree, the Contractor shall be allowed a reasonable time to perform the Construction Contract, but such an agreement shall not waive the Owner's right, if any, subsequently to declare a Contractor Default;

3.2 The Owner declares a Contractor Default, terminates the Construction Contract and notifies the Surety; and

3.3 The Owner has agreed to pay the Balance of the Contract Price in accordance with the terms of the Construction Contract to the Surety or to a contractor selected to perform the Construction Contract.

4. Failure on the part of the Owner to comply with the notice requirement in Paragraph 3.1 shall not constitute a failure to comply with a condition precedent to the Surety's obligations, or release the Surety from its obligations, except to the extent the Surety demonstrates actual prejudice.

5. When the Owner has satisfied the conditions of Paragraph 3, the Surety shall promptly and at the Surety's expense take one of the following actions:

5.1 Arrange for the Contractor, with the consent of the Owner, to perform and complete the Construction Contract;

5.2 Undertake to perform and complete the Construction Contract itself, through its agents or independent contractors;

5.3 Obtain bids or negotiated proposals from qualified contractors acceptable to the Owner for a contract for performance and completion of the Construction Contract, arrange for a contract to be prepared for execution by the Owner and a contractor selected with the Owners concurrence, to be secured with performance and payment bonds executed by a qualified surety equivalent to the bonds issued on the Construction Contract, and pay to the Owner the amount of damages as described in Paragraph 7 in excess of the Balance of the Contract Price incurred by the Owner as a result of the Contractor Default; or

5.4 Waive its right to perform and complete, arrange for completion, or obtain a new contractor, and with reasonable promptness under the circumstances:

5.4.1 After investigation, determine the amount for which it may be liable to the Owner and, as soon as practicable after the amount is determined, make payment to the Owner; or

5.4.2 Deny liability in whole or in part and notify the Owner, citing the reasons for denial.

6. If the Surety does not proceed as provided in Paragraph 5 with reasonable promptness, the Surety shall be deemed to be in default on this Bond seven days after receipt of an additional written notice from the Owner to the Surety demanding that the Surety perform its obligations under this Bond, and the Owner shall be entitled to enforce any remedy available to the Owner. If the Surety proceeds as provided in Paragraph 5.4, and the Owner refuses the payment or the Surety has denied liability, in whole or in part, without further notice the Owner shall be entitled to enforce any remedy available to the Owner.

7. If the Surety elects to act under Paragraph 5.1, 5.2, or 5.3, then the responsibilities of the Surety to the Owner shall not be greater than those of the Contractor under the Construction Contract, and the responsibilities of the Owner to the Surety shall not be greater than those of the Owner under the Construction Contract. Subject to the commitment by the Owner to pay the Balance of the Contract Price, the Surety is obligated, without duplication for:

7.1 the responsibilities of the Contractor for correction of defective work and completion of the Construction Contract;

7.2 additional legal, design professional, and delay costs resulting from the Contractor's Default, and resulting from the actions or failure to act of the Surety under Paragraph 5; and

7.3 liquidated damages, or if no liquidated damages are specified in the Construction Contract, actual damages caused by delayed performance or non-performance of the Contractor.

8. If the Surety elects to act under Paragraph 5.1, 5.3, or 5.4, the Surety's liability is limited to the amount of this Bond.

9. The Surety shall not be liable to the Owner or others for obligations of the Contractor that are unrelated to the Construction Contract, and the Balance of the Contract Price shall not be reduced or set off on account of any such unrelated obligations. No right of action shall accrue on this Bond to any person or entity other than the Owner or its heirs, executors, administrators, successors, and assigns.

10. The Surety hereby waives notice of any change, including changes of time, to the Construction Contract or to related subcontracts, purchase orders, and other obligations.

11. Any proceeding, legal or equitable, under this Bond may be instituted in any court of competent jurisdiction in the location in which the work or part of the work is located and shall be instituted within two years after a declaration of Contractor Default or within

two years after the Contractor ceased working or within two years after the Surety refuses or fails to perform its obligations under this Bond, whichever occurs first. If the provisions of this paragraph are void or prohibited by law, the minimum periods of limitations available to sureties as a defense in the jurisdiction of the suit shall be applicable.

12. Notice to the Surety, the Owner, or the Contractor shall be mailed or delivered to the address shown on the page on which their signature appears.

13. When this Bond has been furnished to comply with a statutory or other legal requirement in the location where the construction was to be performed, any provision in this Bond conflicting with said statutory or legal requirement shall be deemed deleted herefrom and provisions conforming to such statutory or other legal requirement shall be deemed incorporated herein. When so furnished, the intent is that this Bond shall be construed as a statutory bond and not as a common law bond.

14. Definitions

14.1 Balance of the Contract Price: The total amount payable by the Owner to the Contractor under the Construction Contract after all proper adjustments have been made including allowance for the Contractor for any amounts received or to be received by the Owner in settlement of insurance or other claims for damages to which the Contractor is entitled, reduced by all valid and proper payments made to or on behalf of the Contractor under the Construction Contract.

14.2 Construction Contract: The agreement between the Owner and Contractor identified on the cover page, including all Contract Documents and changes made to the agreement and the Contract Documents.

14.3 Contractor Default: Failure of the Contractor, which has not been remedied or waived, to perform or otherwise to comply with a material term of the Construction Contract.

14.4 Owner Default: Failure of the Owner, which has not been remedied or waived, to pay the Contractor as required under the Construction Contract or to perform and complete or comply with the other material terms of the Construction Contract.

14.5 Contract Documents: All the documents that comprise the agreement between the Owner and Contractor.

15. If this Bond is issued for an agreement between a contractor and subcontractor, the term Contractor in this Bond shall be deemed to be Subcontractor and the term Owner shall be deemed to be Contractor.

16. Modifications to this Bond are as follows:

This page intentionally left blank

EJCDC
ENGINEERS JOINT CONTRACT DOCUMENTS COMMITTEE

PAYMENT BOND (Form C-006113.16)

CONTRACTOR *(name and address)*:

SURETY *(name and address of principal place of business)*:

OWNER *(name and address)*:

CONSTRUCTION CONTRACT
Effective Date of the Agreement:
Amount:
Description *(name and location)*:

BOND
Bond Number:
Date *(not earlier than the Effective Date of the Agreement of the Construction Contract)*:
Amount:
Modifications to this Bond Form: ☐ None ☐ See Paragraph 18

Surety and Contractor, intending to be legally bound hereby, subject to the terms set forth below, do each cause this Payment Bond to be duly executed by an authorized officer, agent, or representative.

CONTRACTOR AS PRINCIPAL

_____ *(seal)*
Contractor's Name and Corporate Seal

By: _____
Signature

_____
Print Name

_____
Title

Attest: _____
Signature

_____
Title

SURETY

_____ *(seal)*
Surety's Name and Corporate Seal

By: _____
Signature *(attach power of attorney)*

_____
Print Name

_____
Title

Attest: _____
Signature

_____
Title

Notes: (1) Provide supplemental execution by any additional parties, such as joint venturers. (2) Any singular reference to Contractor, Surety, Owner, or other party shall be considered plural where applicable.

1. The Contractor and Surety, jointly and severally, bind themselves, their heirs, executors, administrators, successors, and assigns to the Owner to pay for labor, materials, and equipment furnished for use in the performance of the Construction Contract, which is incorporated herein by reference, subject to the following terms.

2. If the Contractor promptly makes payment of all sums due to Claimants, and defends, indemnifies, and holds harmless the Owner from claims, demands, liens, or suits by any person or entity seeking payment for labor, materials, or equipment furnished for use in the performance of the Construction Contract, then the Surety and the Contractor shall have no obligation under this Bond.

3. If there is no Owner Default under the Construction Contract, the Surety's obligation to the Owner under this Bond shall arise after the Owner has promptly notified the Contractor and the Surety (at the address described in Paragraph 13) of claims, demands, liens, or suits against the Owner or the Owner's property by any person or entity seeking payment for labor, materials, or equipment furnished for use in the performance of the Construction Contract, and tendered defense of such claims, demands, liens, or suits to the Contractor and the Surety.

4. When the Owner has satisfied the conditions in Paragraph 3, the Surety shall promptly and at the Surety's expense defend, indemnify, and hold harmless the Owner against a duly tendered claim, demand, lien, or suit.

5. The Surety's obligations to a Claimant under this Bond shall arise after the following:

   5.1 Claimants who do not have a direct contract with the Contractor,

      5.1.1 have furnished a written notice of non-payment to the Contractor, stating with substantial accuracy the amount claimed and the name of the party to whom the materials were, or equipment was, furnished or supplied or for whom the labor was done or performed, within ninety (90) days after having last performed labor or last furnished materials or equipment included in the Claim; and

      5.1.2 have sent a Claim to the Surety (at the address described in Paragraph 13).

   5.2 Claimants who are employed by or have a direct contract with the Contractor have sent a Claim to the Surety (at the address described in Paragraph 13).

6. If a notice of non-payment required by Paragraph 5.1.1 is given by the Owner to the Contractor, that is sufficient to satisfy a Claimant's obligation to furnish a written notice of non-payment under Paragraph 5.1.1.

7. When a Claimant has satisfied the conditions of Paragraph 5.1 or 5.2, whichever is applicable, the Surety shall promptly and at the Surety's expense take the following actions:

   7.1 Send an answer to the Claimant, with a copy to the Owner, within sixty (60) days after receipt of the Claim, stating the amounts that are undisputed and the basis for challenging any amounts that are disputed; and

   7.2 Pay or arrange for payment of any undisputed amounts.

   7.3 The Surety's failure to discharge its obligations under Paragraph 7.1 or 7.2 shall not be deemed to constitute a waiver of defenses the Surety or Contractor may have or acquire as to a Claim, except as to undisputed amounts for which the Surety and Claimant have reached agreement. If, however, the Surety fails to discharge its obligations under Paragraph 7.1 or 7.2, the Surety shall indemnify the Claimant for the reasonable attorney's fees the Claimant incurs thereafter to recover any sums found to be due and owing to the Claimant.

8. The Surety's total obligation shall not exceed the amount of this Bond, plus the amount of reasonable attorney's fees provided under Paragraph 7.3, and the amount of this Bond shall be credited for any payments made in good faith by the Surety.

9. Amounts owed by the Owner to the Contractor under the Construction Contract shall be used for the performance of the Construction Contract and to satisfy claims, if any, under any construction performance bond. By the Contractor furnishing and the Owner accepting this Bond, they agree that all funds earned by the Contractor in the performance of the Construction Contract are dedicated to satisfy obligations of the Contractor and Surety under this Bond, subject to the Owner's priority to use the funds for the completion of the work.

10. The Surety shall not be liable to the Owner, Claimants, or others for obligations of the Contractor that are unrelated to the Construction Contract. The Owner shall not be liable for the payment of any costs or expenses of any Claimant under this Bond, and shall have under this Bond no obligation to make payments to or give notice on behalf of Claimants, or otherwise have any obligations to Claimants under this Bond.

11. The Surety hereby waives notice of any change, including changes of time, to the Construction Contract or to related subcontracts, purchase orders, and other obligations.

12. No suit or action shall be commenced by a Claimant under this Bond other than in a court of competent jurisdiction in the state in which the project that is the subject of the Construction Contract is located or after the expiration of one year from the date (1) on which the Claimant sent a Claim to the Surety pursuant to Paragraph 5.1.2 or 5.2, or

(2) on which the last labor or service was performed by anyone or the last materials or equipment were furnished by anyone under the Construction Contract, whichever of (1) or (2) first occurs. If the provisions of this paragraph are void or prohibited by law, the minimum period of limitation available to sureties as a defense in the jurisdiction of the suit shall be applicable.

13. Notice and Claims to the Surety, the Owner, or the Contractor shall be mailed or delivered to the address shown on the page on which their signature appears. Actual receipt of notice or Claims, however accomplished, shall be sufficient compliance as of the date received.

14. When this Bond has been furnished to comply with a statutory or other legal requirement in the location where the construction was to be performed, any provision in this Bond conflicting with said statutory or legal requirement shall be deemed deleted herefrom and provisions conforming to such statutory or other legal requirement shall be deemed incorporated herein. When so furnished, the intent is that this Bond shall be construed as a statutory bond and not as a common law bond.

15. Upon requests by any person or entity appearing to be a potential beneficiary of this Bond, the Contractor and Owner shall promptly furnish a copy of this Bond or shall permit a copy to be made.

16. **Definitions**

16.1 **Claim:** A written statement by the Claimant including at a minimum:

1. The name of the Claimant;
2. The name of the person for whom the labor was done, or materials or equipment furnished;
3. A copy of the agreement or purchase order pursuant to which labor, materials, or equipment was furnished for use in the performance of the Construction Contract;
4. A brief description of the labor, materials, or equipment furnished;
5. The date on which the Claimant last performed labor or last furnished materials or equipment for use in the performance of the Construction Contract;
6. The total amount earned by the Claimant for labor, materials, or equipment furnished as of the date of the Claim;
7. The total amount of previous payments received by the Claimant; and
8. The total amount due and unpaid to the Claimant for labor, materials, or equipment furnished as of the date of the Claim.

16.2 **Claimant:** An individual or entity having a direct contract with the Contractor or with a subcontractor of the Contractor to furnish labor, materials, or equipment for use in the performance of the Construction Contract. The term Claimant also includes any individual or entity that has rightfully asserted a claim under an applicable mechanic's lien or similar statute against the real property upon which the Project is located. The intent of this Bond shall be to include without limitation in the terms of "labor, materials, or equipment" that part of the water, gas, power, light, heat, oil, gasoline, telephone service, or rental equipment used in the Construction Contract, architectural and engineering services required for performance of the work of the Contractor and the Contractor's subcontractors, and all other items for which a mechanic's lien may be asserted in the jurisdiction where the labor, materials, or equipment were furnished.

16.3 **Construction Contract:** The agreement between the Owner and Contractor identified on the cover page, including all Contract Documents and all changes made to the agreement and the Contract Documents.

16.4 **Owner Default**: Failure of the Owner, which has not been remedied or waived, to pay the Contractor as required under the Construction Contract or to perform and complete or comply with the other material terms of the Construction Contract.

16.5 **Contract Documents:** All the documents that comprise the agreement between the Owner and Contractor.

17. If this Bond is issued for an agreement between a contractor and subcontractor, the term Contractor in this Bond shall be deemed to be Subcontractor and the term Owner shall be deemed to be Contractor.

18. Modifications to this Bond are as follows:

This page intentionally left blank

SAMPLE NOTICE TO PROCEED (C-00 55 00)

Date: _____

Project: Town Center Parking Improvement Project

Owner: Town of Westbrook, Connecticut Owner's Contract No.:

Contract: Engineer's Project No.:

Contractor:

Contractor's Address: [send Certified Mail, Return Receipt Requested]

You are notified that the Contract Times under the above Contract will commence to run on . On or before that date, you are to start performing your obligations under the Contract Documents

In accordance with Article 4 of the Agreement, the number of days to achieve Substantial Completion is 60 days, and the number of days to achieve readiness for final payment is 90 days.

Before you may start any Work at the Site, Paragraph 2.01.B of the General Conditions, and Supplementary Conditions if any, provide that you and Owner must each deliver to the other (with copies to Engineer and other identified additional insureds and loss payees) certificates of insurance which each is required to purchase and maintain in accordance with the Contract Documents.

Also, before you may start any Work at the Site, you must:

[add other requirements].

	Town of Westbrook
	Owner
	Given by: Meg Parulis
	Authorized Signature
	Town Planner
	Title
	Date

Copy to Engineer

SECTION 00 60 00

PROJECT FORMS

The following forms are included in this Section and shall be used for the Project as specified in the General Conditions and Supplementary Conditions if any, and the General Requirements. Completed and execution versions of these forms used during the Project shall be incorporated into the Agreement and made a part thereof.

Application for Payment Form (C-00 62 76)
Request for Interpretation/Information Form (C-00 63 15)
Field Order Form (C-00 63 36)
Work Change Directive Form (C-00 63 49)
Change Request Form (C- 00 63 60)
Change Order Form (C-00 63 63)
Notice of Substantial Completion Form (C-00 65 15)
Certificate of Substantial Completion Form (C-00 65 16)
Notice of Completion Form (C-00 65 18)

This page intentionally left blank

EJCDC
ENGINEERS JOINT CONTRACT DOCUMENTS COMMITTEE

FORM C-00 62 76

Contractor's Application for Payment No.

	Application Period:	Application Date:
To (Owner):	From (Contractor):	Via (Engineer):
Project:	Contract:	
Owner's Contract No.:	Contractor's Project No.:	Engineer's Project No.:

Application For Payment

Change Order Summary

Approved Change Orders		
Number	Additions	Deductions
TOTALS		
NET CHANGE BY CHANGE ORDERS		

1. ORIGINAL CONTRACT PRICE..... $ _____

2. Net change by Change Orders..... $ _____

3. Current Contract Price (Line 1 ± 2)..... $ _____

4. TOTAL COMPLETED AND STORED TO DATE (Column F on Progress Estimate)..... $ _____

5. RETAINAGE:

a. X _____ **Work Completed**..... $ _____

b. X _____ **Stored Material**..... $ _____

c. Total Retainage (Line 5a + Line 5b)..... $ _____

6. AMOUNT ELIGIBLE TO DATE (Line 4 - Line 5c)..... $ _____

7. LESS PREVIOUS PAYMENTS (Line 6 from prior Application)..... $ _____

8. AMOUNT DUE THIS APPLICATION..... $ _____

9. BALANCE TO FINISH, PLUS RETAINAGE (Column G on Progress Estimate + Line 5 above)..... $ _____

Contractor's Certification

The undersigned Contractor certifies that to the best of its knowledge: (1) all previous progress payments received from Owner on account of Work done under the Contract have been applied on account to discharge Contractor's legitimate obligations incurred in connection with Work covered by prior Applications for Payment; (2) title of all Work, materials and equipment incorporated in said Work or otherwise listed in or covered by this Application for Payment will pass to Owner at time of payment free and clear of all Liens, security interests and encumbrances (except such as are covered by a Bond acceptable to Owner indemnifying Owner against any such Liens, security interest or encumbrances); and (3) all Work covered by this Application for Payment is in accordance with the Contract Documents and is not defective.

By:	Date:

Payment of: $ _____
(Line 8 or other - attach explanation of the other amount)

is recommended by: _____ _____
(Engineer) (Date)

Payment of: $ _____
(Line 8 or other - attach explanation of the other amount)

is approved by: _____ _____
(Owner) (Date)

Approved by: _____ _____
Funding Agency (if applicable) (Date)

Approved by: _____ _____
Funding Agency (if applicable) (Date)

© 2010 National Society of Professional Engineers for EJCDC. All rights reserved.

REQUEST FOR INTERPRETATION/INFORMATION (Form C-00 63 15)

RFI #: _____ ☐ **Attachment**

To: _____ From: _____

Attn: _____ Issue Date: _____

Project: _____ Required Reply Date: _____

DISTRIBUTION:

Contractor	Owner	Engineer
☐ _____	☐ _____	☐ _____
☐ _____	☐ _____	☐ _____
☐ _____	☐ _____	☐ _____

REFERENCES:

- Specifications: _____ Section: _____ Page/Paragraph: _____
- Drawings: _____ Issue Date: _____ Detail/Sections: _____
- Work Area: _____ Grid/Level: _____

RFI DESCRIPTION:

From: _____ Tel No: _____ Fax: No: _____

Initial: _____ E-mail: _____

RFI REPLY:

Possible Cost Effect Yes: ☐ No: ☐ **Possible Schedule Effect** Yes: ☐ No: ☐

From: _____ Reply Date: _____ xc: _____

Initial: _____ _____

Based on: CASE Form B-1999

This page intentionally left blank

Field Order (C-00 63 36)

No. _____

Date of Issuance: _____ Effective Date: _____

Project:	Owner:	Owner's Contract No.:
Contract:		Date of Contract:
Contractor:		Engineer's Project No.:

Attention:
You are hereby directed to promptly execute this Field Order issued in accordance with General Conditions Paragraph 9.04.A, for minor changes in the Work without changes in Contract Price or Contract Times. If you consider that a change in Contract Price or Contract Times is required, please notify the Engineer immediately and before proceeding with this Work.

Reference: _____ _____
(Specification Section(s)) (Drawing(s) / Detail(s))

Description:

Attachments:

	Engineer:

Receipt Acknowledged by Contractor:	Date:

Copy to Owner

This page intentionally left blank

Work Change Directive (Form C-00 63 49)

No. _____

Date of Issuance: _____ Effective Date: _____

Project:	Owner:	Owner's Contract No.:
Contract:		Date of Contract:
Contractor:		Engineer's Project No.:

Contractor is directed to proceed promptly with the following change(s):

Item No.	Description

Attachments (list documents supporting change):

_____

_____

Purpose for Work Change Directive:

Authorization for Work described herein to proceed on the basis of Cost of the Work due to:

- ☐ Nonagreement on pricing of proposed change.
- ☐ Necessity to expedite Work described herein prior to agreeing to changes on Contract Price and Contract Time.

Estimated change in Contract Price and Contract Times:

Contract Price $_____ (increase/decrease) Contract Time _____ (increase/decrease) days

Recommended for Approval by Engineer:	Date
Authorized for Owner by:	Date
Received for Contractor by:	Date
Received by Funding Agency (if applicable):	Date:

This page intentionally left blank

CHANGE REQUEST (FORM C-00 63 60)
(Design Changes/Deviations/Substitutions)

CR NO.
DATE

Project:

Request Initiated by:
- ☐ Contractor
- ☐ Owner
- ☐ Engineer

Impact to Contract Price expected ☐
Impact to Contract Time expected ☐
Change Orders will be processed separately

Request submitted as (format):

Description of Change (☐ <u>documentation attached)</u>

Reason for Change

Response: ☐ This constitutes a Written Amendment to the Agreement.

Review of the proposed change/deviation/substitution by Engineer is for general compatibility with the design concept of the Project. This review does not extend to means, methods, sequences, or procedures of construction or to issues of safety incident thereto. This review shall not relieve the Contractor from responsibility for full compliance with the requirements specified and to determine and verify the information contained therein.

Recommended By Engineer for Acceptance (subject to above comments if any) ☐ recommended for processing and approval under a separate Change Order NAME: *Signature* *Date*	☐ Approved by Owner (no schedule or cost impact) ☐ Acknowledged by Owner – to be processed and approved under a separate Change Order NAME: *Signature* *Date*
Approved by Contractor ☐ Change Order to be requested NAME: *Signature* *Date*	

This page intentionally left blank

Change Order (Form C-00 63 63)

No. _____

Date of Issuance: _____ Effective Date: _____

Project:	Owner:	Owner's Contract No.:
Contract:		Date of Contract:
Contractor:		Engineer's Project No.:

The Contract Documents are modified as follows upon execution of this Change Order:

Description:

Attachments (list documents supporting change):

CHANGE IN CONTRACT PRICE:	CHANGE IN CONTRACT TIMES:
Original Contract Price: $_____	Original Contract Times: ☐ Working days ☐ Calendar days Substantial completion (days or date): _____ Ready for final payment (days or date): _____
[Increase] [Decrease] from previous approved Change Orders No. _____ to No. _____: $_____	[Increase] [Decrease] from previous approved Change Orders No. _____ to No. _____: Substantial completion (days): _____ Ready for final payment (days): _____
Contract Price prior to this Change Order: $_____	Contract Times prior to this Change Order: Substantial completion (days or date): _____ Ready for final payment (days or date): _____
[Increase] [Decrease] of this Change Order: $_____	[Increase] [Decrease] of this Change Order: Substantial completion (days or date): _____ Ready for final payment (days or date): _____
Contract Price incorporating this Change Order: $_____	Contract Times with all approved Change Orders: Substantial completion (days or date): _____ Ready for final payment (days or date): _____

RECOMMENDED:	ACCEPTED:	ACCEPTED:
By: _____	By: _____	By: _____
Engineer (Authorized Signature)	Owner (Authorized Signature)	Contractor (Authorized Signature)
Date: _____	Date: _____	Date: _____
Approved by Funding Agency (if applicable):	Approved by Funding Agency (if applicable):	Approved by Funding Agency (if applicable):

_____	_____	_____
Date: _____	Date: _____	Date: _____

Change Order

Instructions

A. GENERAL INFORMATION

This document was developed to provide a uniform format for handling contract changes that affect Contract Price or Contract Times. Changes that have been initiated by a Work Change Directive must be incorporated into a subsequent Change Order if they affect Price or Times.

Changes that affect Contract Price or Contract Times should be promptly covered by a Change Order. The practice of accumulating Change Orders to reduce the administrative burden may lead to unnecessary disputes.

If Milestones have been listed in the Agreement, any effect of a Change Order thereon should be addressed.

For supplemental instructions and minor changes not involving a change in the Contract Price or Contract Times, a Field Order should be used.

B. COMPLETING THE CHANGE ORDER FORM

Engineer normally initiates the form, including a description of the changes involved and attachments based upon documents and proposals submitted by Contractor, or requests from Owner, or both.

Once Engineer has completed and signed the form, all copies should be sent to Owner or Contractor for approval, depending on whether the Change Order is a true order to the Contractor or the formalization of a negotiated agreement for a previously performed change. After approval by one contracting party, all copies should be sent to the other party for approval. Engineer should make distribution of executed copies after approval by both parties.

If a change only applies to price or to times, cross out the part of the tabulation that does not apply.

Notice of Substantial Completion (C-00 65 15)

Project:	Owner:	Owner's Contract No.:
Contract:		Date of Contract:
Contractor:		

This NOTICE of Substantial Completion applies to:

☐ The following Systems, Equipment or specified portions ☐ : All Work under the Contract Documents

:

Date of Substantial Completion for above

The following documents are attached to and made part of this Notice.

Submitted by Contractor

Date

This page intentionally left blank

Certificate of Substantial Completion (Form C-00 65 16)

Project:	
Owner:	Owner's Contract No.:
Contract:	Engineer's Project No.:

This [tentative] [definitive] Certificate of Substantial Completion applies to:

☐ All Work under the Contract Documents: ☐ The following specified portions of the Work:

_____

_____

_____

_____

_____
Date of Substantial Completion

The Work to which this Certificate applies has been inspected by authorized representatives of Owner, Contractor, and Engineer, and found to be substantially complete. The Date of Substantial Completion of the Project or portion thereof designated above is hereby declared and is also the date of commencement of applicable warranties required by the Contract Documents, except as stated below.

A [tentative] [definitive] list of items to be completed or corrected is attached hereto. This list may not be all-inclusive, and the failure to include any items on such list does not alter the responsibility of the Contractor to complete all Work in accordance with the Contract Documents.

The responsibilities between Owner and Contractor for security, operation, safety, maintenance, heat, utilities, insurance and warranties shall be as provided in the Contract Documents except as amended as follows:

☐ Amended Responsibilities ☐ Not Amended

Owner's Amended Responsibilities:

_____

_____

_____

Contractor's Amended Responsibilities:

_____

_____

_____

_____

The following documents are attached to and made part of this Certificate:

_____

_____

_____

This Certificate does not constitute an acceptance of Work not in accordance with the Contract Documents nor is it a release of Contractor's obligation to complete the Work in accordance with the Contract Documents.

Executed by Engineer	Date
Accepted by Contractor	Date
Accepted by Owner	Date

Notice of Completion (Form C-00 65 18)

Project:	Owner:	Owner's Contract No.:
Contract:		Date of Contract:
Contractor:		

This NOTICE of Completion applies to:

☐ All Work under the Contract Documents: ☐ The following specified portions:

_____

_____

_____

_____

_____
Date of final Completion

The Work to which this Notice applies is ready for inspection by authorized representatives of Engineer and Owner. Contractor has completed all corrections, delivered all required documentation, and the Project, or portion designated above, is complete. The Date of Completion of the Project or portion thereof designated above is hereby declared by the Contractor.
.

The following documents are attached to and made part of this Certificate:

Final Punchlist

Final Application for Payment

Only the **making and acceptance of final payment** will constitute:

1. A waiver of all claims by Owner against Contractor, except claims arising from any unsettled liens, from Defective Construction appearing after final inspection; from failure to comply with the Contract Documents or the terms of any special guarantees specified therein, or from Contractor's continuing obligations under the Contract Documents; and
2. A waiver of all claims by Contractor against Owner other than those previously timely made in writing and still unsettled.

_____ _____
Submitted by Contractor Date

This page intentionally left blank

This document has important legal consequences; consultation with an attorney is encouraged with respect to its use or modification. This document should be adapted to the particular circumstances of the contemplated Project and the controlling Laws and Regulations.

SECTION 00 72 05
STANDARD GENERAL CONDITIONS OF THE CONSTRUCTION CONTRACT

Prepared by

ENGINEERS JOINT CONTRACT DOCUMENTS COMMITTEE

and

Issued and Published Jointly by

AMERICAN COUNCIL OF ENGINEERING COMPANIES

ASSOCIATED GENERAL CONTRACTORS OF AMERICA

AMERICAN SOCIETY OF CIVIL ENGINEERS

PROFESSIONAL ENGINEERS IN PRIVATE PRACTICE
A Practice Division of the
NATIONAL SOCIETY OF PROFESSIONAL ENGINEERS

Endorsed by

CONSTRUCTION SPECIFICATIONS INSTITUTE

REVISIONS HIGHLIGHTED WITHIN THE TEXT OF THIS SECTION HAVE BEEN PREPARED BY WOODARD & CURRAN ON BEHALF OF OWNER

Copyright © 2007 National Society of Professional Engineers for EJCDC. All rights reserved.

These General Conditions have been prepared for use with the Suggested Forms of Agreement Between Owner and Contractor (EJCDC C-520 or C-525, 2007 Editions). Their provisions are interrelated and a change in one may necessitate a change in the other. Comments concerning their usage are contained in the Narrative Guide to the EJCDC Construction Documents (EJCDC C-001, 2007 Edition). For guidance in the preparation of Supplementary Conditions, see Guide to the Preparation of Supplementary Conditions (EJCDC C-800, 2007 Edition).

Copyright © 2007 National Society of Professional Engineers
1420 King Street, Alexandria, VA 22314-2794
(703) 684-2882
www.nspe.org

American Council of Engineering Companies
1015 15th Street N.W., Washington, DC 20005
(202) 347-7474
www.acec.org

American Society of Civil Engineers
1801 Alexander Bell Drive, Reston, VA 20191-4400
(800) 548-2723
www.asce.org

Associated General Contractors of America
2300 Wilson Boulevard, Suite 400, Arlington, VA 22201-3308
(703) 548-3118
www.agc.org

The copyright for this EJCDC document is owned jointly by the four
EJCDC sponsoring organizations and held in trust for their benefit by NSPE.

Copyright © 2007 National Society of Professional Engineers for EJCDC. All rights reserved.

SECTION 00 72 05
STANDARD GENERAL CONDITIONS OF THE CONSTRUCTION CONTRACT

TABLE OF CONTENTS

Page

Article 1 – Definitions and Terminology 1
1.01 Defined Terms 1
1.02 Terminology 6

Article 2 – Preliminary Matters 7
2.01 Delivery of Bonds and Evidence of Insurance 7
2.02 Copies of Documents 7
2.03 Commencement of Contract Times; Notice to Proceed 7
2.04 Starting the Work 7
2.05 Before Starting Construction 8
2.06 Preconstruction Conference; Designation of Authorized Representatives 8
2.07 Initial Acceptance of Schedules 8

Article 3 – Contract Documents: Intent, Amending, Reuse 9
3.01 Intent 9
3.02 Reference Standards 9
3.03 Reporting and Resolving Discrepancies 10
3.04 Amending and Supplementing Contract Documents 11
3.05 Reuse of Documents 11
3.06 Electronic Data 11

Article 4 – Availability of Lands; Subsurface and Physical Conditions; Hazardous Environmental Conditions; Reference Points 12
4.01 Availability of Lands 12
4.02 Subsurface and Physical Conditions 12
4.03 Differing Subsurface or Physical Conditions 13
4.04 Underground Facilities 14
4.05 Reference Points 15
4.06 Hazardous Environmental Condition at Site 15

Article 5 – Bonds and Insurance 17
5.01 Performance, Payment, and Other Bonds 17
5.02 Licensed Sureties and Insurers 18
5.03 Certificates of Insurance 18
5.04 Contractor's Insurance 19
5.05 Owner's Liability Insurance 22
5.06 Property Insurance 22

Copyright © 2007 National Society of Professional Engineers for EJCDC. All rights reserved.

5.07 Waiver of Rights 23
5.08 Receipt and Application of Insurance Proceeds(Not used) 24
5.09 Acceptance of Bonds and Insurance; Option to Replace 24
5.10 Partial Utilization, Acknowledgment of Property Insurer 25

Article 6 – Contractor's Responsibilities 25
6.01 Supervision and Superintendence 25
6.02 Labor; Working Hours 25
6.03 Services, Materials, and Equipment 26
6.04 Progress Schedule 26
6.05 Substitutes and "Or-Equals" 27
6.06 Concerning Subcontractors, Suppliers, and Others 29
6.07 Patent Fees and Royalties 31
6.08 Permits 31
6.09 Laws and Regulations 32
6.10 Taxes 32
6.11 Use of Site and Other Areas 32
6.12 Record Documents 33
6.13 Safety and Protection 33
6.14 Safety Representative 34
6.15 Hazard Communication Programs 35
6.16 Emergencies 35
6.17 Shop Drawings and Samples 35
6.18 Continuing the Work 37
6.19 Contractor's General Warranty and Guarantee 37
6.20 Indemnification 39
6.21 Delegation of Professional Design Services 40

Article 7 – Other Work at the Site 41
7.01 Related Work at Site 41
7.02 Coordination 42
7.03 Legal Relationships 42

Article 8 – Owner's Responsibilities 42
8.01 Communications to Contractor 42
8.02 Replacement of Engineer 42
8.03 Furnish Data 42
8.04 Pay When Due 42
8.05 Lands and Easements; Reports and Tests 43
8.06 Insurance 43
8.07 Change Orders 43
8.08 Inspections, Tests, and Approvals 43
8.09 Limitations on Owner's Responsibilities 43
8.10 Undisclosed Hazardous Environmental Condition 43
8.11 Evidence of Financial Arrangements 43
8.12 Compliance with Safety Program 43

Copyright © 2007 National Society of Professional Engineers for EJCDC. All rights reserved.
Revisions highlighted within the text have been prepared by Woodard & Curran on behalf of Owner

Article 9 – Engineer's Status During Construction 44
9.01 Owner's Representative 44
9.02 Visits to Site 44
9.03 Project Representative 44
9.04 Authorized Variations in Work 47
9.05 Rejecting Defective Work 48
9.06 Shop Drawings, Change Orders and Payments 48
9.07 Determinations for Unit Price Work 48
9.08 Decisions on Requirements of Contract Documents and Acceptability of Work 48
9.09 Limitations on Engineer's Authority and Responsibilities 49
9.10 Compliance with Safety Program 50

Article 10 – Changes in the Work; Claims 50
10.01 Authorized Changes in the Work 50
10.02 Unauthorized Changes in the Work 50
10.03 Execution of Change Orders 50
10.04 Notification to Surety 51
10.05 Claims 51

Article 11 – Cost of the Work; Allowances; Unit Price Work 52
11.01 Cost of the Work 52
11.02 Allowances 55
11.03 Unit Price Work 55

Article 12 – Change of Contract Price; Change of Contract Times 56
12.01 Change of Contract Price 56
12.02 Change of Contract Times 57
12.03 Delays 57

Article 13 – Tests and Inspections; Correction, Removal or Acceptance of Defective Work 58
13.01 Notice of Defects 58
13.02 Access to Work 58
13.03 Tests and Inspections 58
13.04 Uncovering Work 59
13.05 Owner May Stop the Work 60
13.06 Correction or Removal of Defective Work 60
13.07 Correction Period 60
13.08 Acceptance of Defective Work 61
13.09 Owner May Correct Defective Work 61

Article 14 – Payments to Contractor and Completion 62
14.01 Schedule of Values 62
14.02 Progress Payments 62
14.03 Contractor's Warranty of Title 65
14.04 Substantial Completion 65
14.05 Partial Utilization 66
14.06 Final Inspection 67

Copyright © 2007 National Society of Professional Engineers for EJCDC. All rights reserved.

14.07 Final Payment 68
14.08 Final Completion Delayed 69
14.09 Waiver of Claims 69

Article 15 – Suspension of Work and Termination 69
15.01 Owner May Suspend Work 69
15.02 Owner May Terminate for Cause 70
15.03 Owner May Terminate For Convenience 71
15.04 Contractor May Stop Work or Terminate 72

Article 16 – Dispute Resolution 72
16.01 Methods and Procedures 72
16.02 Arbitration 73
16.03 General 74

Article 17 – Miscellaneous 75
17.01 Giving Notice 75
17.02 Computation of Times 75
17.03 Cumulative Remedies 75
17.04 Survival of Obligations 75
17.05 Controlling Law 75
17.06 Headings 75
17.07 Professional Fees and Court Costs Included 76

Copyright © 2007 National Society of Professional Engineers for EJCDC. All rights reserved.
Revisions highlighted within the text have been prepared by Woodard & Curran on behalf of Owner

ARTICLE 1 – DEFINITIONS AND TERMINOLOGY

1.01 *Defined Terms*

A. Wherever used in the Bidding Requirements or Contract Documents and printed with initial capital letters, the terms listed below will have the meanings indicated which are applicable to both the singular and plural thereof. In addition to terms specifically defined, terms with initial capital letters in the Contract Documents include references to identified articles and paragraphs, and the titles of other documents or forms.

1. *Addenda*—Written or graphic instruments issued prior to the opening of Bids which clarify, correct, or change the Bidding Requirements or the proposed Contract Documents.

2. *Agreement*—The written instrument which is evidence of the agreement between Owner and Contractor covering the Work.

3. *Application for Payment*—The form acceptable to Engineer which is to be used by Contractor during the course of the Work in requesting progress or final payments and which is to be accompanied by such supporting documentation as is required by the Contract Documents.

4. *Asbestos*—Any material that contains more than one percent asbestos and is friable or is releasing asbestos fibers into the air above current action levels established by the United States Occupational Safety and Health Administration.

5. *Bid*—The offer or proposal of a Bidder submitted on the prescribed form setting forth the prices for the Work to be performed. May also be referred to as "Proposal" which may be used interchangeably and shall have the same meaning.

6. *Bidder*—The individual or entity who submits a Bid directly to Owner.

7. *Bidding Documents*—The Bidding Requirements and the proposed Contract Documents (including all Addenda).

8. *Bidding Requirements*—The advertisement or invitation to bid, Instructions to Bidders, Bid security of acceptable form, if any, and the Bid Form with any supplements.

9. *Change Order*—A document recommended by Engineer which is signed by Contractor and Owner and authorizes an addition, deletion, or revision in the Work or an adjustment in the Contract Price or the Contract Times, issued on or after the Effective Date of the Agreement.

10. *Claim*—A demand or assertion by Owner or Contractor seeking an adjustment of Contract Price or Contract Times, or both, or other relief with respect to the terms of the Contract. A demand for money or services by a third party is not a Claim.

11. *Contract*—The entire and integrated written agreement between the Owner and Contractor concerning the Work. The Contract supersedes prior negotiations, representations, or agreements, whether written or oral.

Copyright © 2007 National Society of Professional Engineers for EJCDC. All rights reserved.
Revisions highlighted within the text have been prepared by Woodard & Curran on behalf Owner

12. *Contract Documents*—Those items so designated in the Agreement. Only printed or hard copies of the items listed in the Agreement are Contract Documents. Approved Shop Drawings, other Contractor submittals, and the reports and drawings of subsurface and physical conditions are not Contract Documents.

13. *Contract Price*—The moneys payable by Owner to Contractor for completion of the Work in accordance with the Contract Documents as stated in the Agreement (subject to the provisions of Paragraph 11.03 in the case of Unit Price Work).

14. *Contract Times*—The number of days or the dates stated in the Agreement to: (i) achieve Milestones, if any; (ii) achieve Substantial Completion; and (iii) complete the Work so that it is ready for final payment as evidenced by Engineer's written recommendation of final payment.

15. *Contractor*—The individual or entity with whom Owner has entered into the Agreement.

16. *Cost of the Work*—See Paragraph 11.01 for definition.

17. *Drawings*—That part of the Contract Documents prepared or approved by Engineer which graphically shows the scope, extent, and character of the Work to be performed by Contractor and complement the Specifications. Shop Drawings and other Contractor submittals are not Drawings as so defined. May also referred to as "Plans", which may be used interchangeably and shall have the same meaning. Notes on Drawings are directed to Contractor unless specifically noted otherwise.

18. *Effective Date of the Agreement*—The date indicated in the Agreement on which it becomes effective, but if no such date is indicated, it means the date on which the Agreement is signed and delivered by the last of the two parties to sign and deliver.

19. *Engineer*—The individual or entity named as such in the Agreement.

20. *Field Order*—A written order issued by Engineer which requires minor changes in the Work but which does not involve a change in the Contract Price or the Contract Times.

21. *General Requirements*—Sections of Division 01 of the Specifications which govern the Work in all sections of the Specifications.

22. *Hazardous Environmental Condition*—The presence at the Site of Asbestos, PCBs, Petroleum, Hazardous Waste, or Radioactive Material in such quantities or circumstances that may present a substantial danger to persons or property exposed thereto.

23. *Hazardous Waste*—The term Hazardous Waste shall have the meaning provided in Section 1004 of the Solid Waste Disposal Act (42 USC Section 6903) as amended from time to time.

24. *Laws and Regulations; Laws or Regulations*—Any and all applicable laws, rules, regulations, ordinances, codes, and orders of any and all governmental bodies, agencies, authorities, and courts having jurisdiction.

Copyright © 2007 National Society of Professional Engineers for EJCDC. All rights reserved.
Revisions highlighted within the text have been prepared by Woodard & Curran on behalf Owner

25. *Liens*—Charges, security interests, or encumbrances upon Project funds, real property, or personal property.

26. *Milestone*—A principal event specified in the Contract Documents relating to an intermediate completion date or time prior to Substantial Completion of all the Work.

27. *Notice of Award*—The written notice by Owner to the Successful Bidder stating that upon timely compliance by the Successful Bidder with the conditions precedent listed therein, Owner will sign and deliver the Agreement.

28. *Notice to Proceed*—A written notice given by Owner to Contractor fixing the date on which the Contract Times will commence to run and on which Contractor shall start to perform the Work under the Contract Documents.

29. *Owner*—The individual or entity with whom Contractor has entered into the Agreement and for whom the Work is to be performed.

30. *PCBs*—Polychlorinated biphenyls.

31. *Petroleum*—Petroleum, including crude oil or any fraction thereof which is liquid at standard conditions of temperature and pressure (60 degrees Fahrenheit and 14.7 pounds per square inch absolute), such as oil, petroleum, fuel oil, oil sludge, oil refuse, gasoline, kerosene, and oil mixed with other non-Hazardous Waste and crude oils.

32. *Progress Schedule*—A schedule, prepared and maintained by Contractor, describing the sequence and duration of the activities comprising the Contractor's plan to accomplish the Work within the Contract Times. May also be referred to as "Construction Schedule", which may be used interchangeably and shall have the same meaning.

33. *Project*—The total construction of which the Work to be performed under the Contract Documents may be the whole, or a part.

34. *Project Manual*—The bound documentary information prepared for bidding and constructing the Work. A listing of the contents of the Project Manual, which may be bound in one or more volumes, is contained in the table(s) of contents.

35. *Radioactive Material*—Source, special nuclear, or byproduct material as defined by the Atomic Energy Act of 1954 (42 USC Section 2011 et seq.) as amended from time to time.

36. *Resident Project Representative*—The authorized representative of Engineer who may be assigned to the Site or any part thereof.

37. *Samples*—Physical examples of materials, equipment, or workmanship that are representative of some portion of the Work and which establish the standards by which such portion of the Work will be judged.

Copyright © 2007 National Society of Professional Engineers for EJCDC. All rights reserved.

38. *Schedule of Submittals*—A schedule, prepared and maintained by Contractor, of required submittals and the time requirements to support scheduled performance of related construction activities.

39. *Schedule of Values*—A schedule, prepared and maintained by Contractor, allocating portions of the Contract Price to various portions of the Work and used as the basis for reviewing Contractor's Applications for Payment.

40. *Shop Drawings*—All drawings, diagrams, illustrations, schedules, and other data or information which are specifically prepared or assembled by or for Contractor and submitted by Contractor to illustrate some portion of the Work.

41. *Site*—Lands or areas indicated in the Contract Documents as being furnished by Owner upon which the Work is to be performed, including rights-of-way and easements for access thereto, and such other lands furnished by Owner which are designated for the use of Contractor.

42. *Specifications*—That part of the Contract Documents consisting of written requirements for materials, equipment, systems, standards and workmanship as applied to the Work, and certain administrative requirements and procedural matters applicable thereto. The Specifications are based on the guidelines of the Construction Specifications Institute (CSI) Project Resource Manual, and are directed to Contractor unless specifically noted otherwise. The words "shall be" are included by inference where a colon (:) is used within sentences or phrases in the Specifications.

43. *Subcontractor*—An individual or entity having a direct contract with Contractor or with any other Subcontractor for the performance of a part of the Work at the Site.

44. *Substantial Completion*—The time at which the Work (or a specified part thereof) has progressed to the point where, in the opinion of Engineer, the Work (or a specified part thereof) is sufficiently complete, in accordance with the Contract Documents, so that the Work (or a specified part thereof) can be utilized for the purposes for which it is intended. The terms "substantially complete" and "substantially completed" as applied to all or part of the Work refer to Substantial Completion thereof.

45. *Successful Bidder*—The Bidder submitting a responsive Bid to whom Owner makes an award.

46. *Supplementary Conditions*—That part of the Contract Documents which amends or supplements these General Conditions.

47. *Supplier*—A manufacturer, fabricator, supplier, distributor, materialman, or vendor having a direct contract with Contractor or with any Subcontractor to furnish materials or equipment to be incorporated in the Work by Contractor or Subcontractor.

Copyright © 2007 National Society of Professional Engineers for EJCDC. All rights reserved.

48. *Underground Facilities*—All underground pipelines, conduits, ducts, cables, wires, manholes, vaults, tanks, tunnels, or other such facilities or attachments, and any encasements containing such facilities, including those that convey electricity, gases, steam, liquid petroleum products, telephone or other communications, cable television, water, wastewater, storm water, other liquids or chemicals, or traffic or other control systems.

49. *Unit Price Work*—Work to be paid for on the basis of unit prices.

50. *Work*—The entire construction or the various separately identifiable parts thereof required to be provided under the Contract Documents. Work includes and is the result of performing or providing all labor, services, and documentation necessary to produce such construction, and furnishing, installing, and incorporating all materials and equipment into such construction, all as required by the Contract Documents.

51. *Work Change Directive*—A written statement to Contractor issued on or after the Effective Date of the Agreement and signed by Owner and recommended by Engineer ordering an addition, deletion, or revision in the Work, or responding to differing or unforeseen subsurface or physical conditions under which the Work is to be performed or to emergencies. A Work Change Directive will not change the Contract Price or the Contract Times but is evidence that the parties expect that the change ordered or documented by a Work Change Directive will be incorporated in a subsequently issued Change Order following negotiations by the parties as to its effect, if any, on the Contract Price or Contract Times.

B. Additional Terms

1. *Final Completion*—The time at which all Work is completed and ready for final payment in accordance with Paragraph 14.07 of these General Conditions.

2. *Industry Practice*—The written practices, methods, materials, supplies and equipment, as changed from time to time, that are commonly used in the industry applicable to the Project to design, construct and operate facilities and plants, or any practices, methods and acts, which in the exercise of reasonable judgment in light of the facts known at the time, could have been expected to accomplish the desired results consistent with good business practices, reliability, safety and expedition.

3. *Punch List*—A list of open items representing portions of the Work which Contractor, Engineer, Owner reasonably agree is not complete on the date of Substantial Completion or Final Completion, but which items will not significantly interfere with the safe, reliable operation and integrity of the Project or its intended use.

4. *Purchase Order*—A written agreement between Contractor and a Supplier for provision of material and equipment.

5. *Warranty Period*—The correction period after the date of Substantial Completion per Paragraph 13.07 of these General Conditions.

Copyright © 2007 National Society of Professional Engineers for EJCDC. All rights reserved.
Revisions highlighted within the text have been prepared by Woodard & Curran on behalf Owner

1.02 *Terminology*

A. The words and terms discussed in Paragraph 1.02.B through F are not defined but, when used in the Bidding Requirements or Contract Documents, have the indicated meaning.

B. Intent of Certain Terms or Adjectives:

1. The Contract Documents include the terms "as allowed," "as approved," "as ordered," "as directed" or terms of like effect or import to authorize an exercise of professional judgment by Engineer. In addition, the adjectives "reasonable," "suitable," "acceptable," "proper," "satisfactory," or adjectives of like effect or import are used to describe an action or determination of Engineer as to the Work. It is intended that such exercise of professional judgment, action, or determination will be solely to evaluate, in general, the Work for compliance with the information in the Contract Documents and with the design concept of the Project as a functioning whole as shown or indicated in the Contract Documents (unless there is a specific statement indicating otherwise). The use of any such term or adjective is not intended to and shall not be effective to assign to Engineer any duty or authority to supervise or direct the performance of the Work, or any duty or authority to undertake responsibility contrary to the provisions of Paragraph 9.09 or any other provision of the Contract Documents.

C. Day:

1. The word "day" means a calendar day of 24 hours measured from midnight to the next midnight. See also Paragraph 17.02 of these General Conditions.

D. Defective:

1. The word "defective," when modifying the word "Work," refers to Work that is unsatisfactory, faulty, or deficient in that it:

a. does not conform to the Contract Documents; or

b. does not meet the requirements of any applicable inspection, reference standard, test, or approval referred to in the Contract Documents; or

c. has been damaged prior to Engineer's recommendation of final payment (unless responsibility for the protection thereof has been assumed by Owner at Substantial Completion in accordance with Paragraph 14.04 or 14.05).

E. Furnish, Install, Perform, Provide:

1. The word "furnish," when used in connection with services, materials, or equipment, shall mean to supply and deliver said services, materials, or equipment to the Site (or some other specified location) ready for use or installation and in usable or operable condition.

2. The word "install," when used in connection with services, materials, or equipment, shall mean to put into use or place in final position said services, materials, or equipment complete and ready for intended use.

Copyright © 2007 National Society of Professional Engineers for EJCDC. All rights reserved.

3. The words "perform" or "provide," when used in connection with services, materials, or equipment, shall mean to furnish and install said services, materials, or equipment complete and ready for intended use.

4. When "furnish," "install," "perform," or "provide" is not used in connection with services, materials, or equipment in a context clearly requiring an obligation of Contractor, "provide" is implied.

F. Unless stated otherwise in the Contract Documents, words or phrases that have a well-known technical or construction industry or trade meaning are used in the Contract Documents in accordance with such recognized meaning.

ARTICLE 2 – PRELIMINARY MATTERS

2.01 *Delivery of Bonds and Evidence of Insurance*

A. ~~When Contractor delivers the executed counterparts~~Prior to execution of the Agreement~~ to Owner~~, Contractor shall ~~also~~ deliver to Owner such bonds as Contractor may be required to furnish.

B. *Evidence of Insurance:* Prior to execution of the Agreement and b~~B~~efore any Work at the Site is started, Contractor and Owner shall each deliver to the other, with copies to each additional insured identified in the Supplementary Conditions, certificates of insurance (and other evidence of insurance which either of them or any additional insured may reasonably request) which Contractor and Owner respectively are required to purchase and maintain in accordance with Article 5.

2.02 *Copies of Documents*

A. Owner shall furnish to Contractor up to ~~ten~~ 5 printed or hard copies of the Contract Documents or Drawings and Project Manual. Additional copies will be furnished upon request at the cost of reproduction.

2.03 *Commencement of Contract Times; Notice to Proceed*

A. The Contract Times will commence to run on the thirtieth day after the Effective Date of the Agreement or, if a Notice to Proceed is given, on the day indicated in the Notice to Proceed. A Notice to Proceed may be given at any time within 30 days after the Effective Date of the Agreement. In no event will the Contract Times commence to run later than the ~~sixtieth~~ 90th day after the day of Bid opening or the thirtieth day after the Effective Date of the Agreement, unless mutually agreed otherwise.~~, whichever date is earlier.~~

2.04 *Starting the Work*

A. Contractor shall start to perform the Work on the date when the Contract Times commence to run. No Work shall be done at the Site prior to the date on which the Contract Times commence to run.

Copyright © 2007 National Society of Professional Engineers for EJCDC. All rights reserved.
Revisions highlighted within the text have been prepared by Woodard & Curran on behalf Owner

2.05 *Before Starting Construction*

A. *Preliminary Schedules:* Within 10 days after the Effective Date of the Agreement (unless otherwise specified in the General Requirements), Contractor shall submit to Engineer for timely review:

1. a preliminary Progress Schedule indicating the times (numbers of days or dates) for starting and completing the various stages of the Work, including any Milestones specified in the Contract Documents and the lead times for equipment and materials per the listing in subparagraph 2.05.A.4;

2. a preliminary Schedule of Submittals; and

3. a preliminary Schedule of Values for all of the Work which includes quantities and prices of items which when added together equal the Contract Price and subdivides the Work into component parts in sufficient detail to serve as the basis for progress payments during performance of the Work which will be confirmed in writing by Contractor at the time of submission. Such prices will include an appropriate amount of overhead and profit applicable to each item of Work; and.

4. a complete listing of equipment and materials with lead times between placing orders and delivery, including normal allowances of time for processing and correcting Shop Drawings. All orders for long lead items shall be placed within 30 days after Effective Date of the Agreement if delivery is critical to scheduling. Failure to place orders promptly may result in full liability for liquidated damages if Contract Times are not met.

B. *Evidence of Insurance*: In accordance with Paragraph 2.01.

2.06 *Preconstruction Conference; Designation of Authorized Representatives*

A. Before any Work at the Site is started, a conference attended by Owner, Contractor, Engineer, and others as appropriate will be held to establish a working understanding among the parties as to the Work and to discuss the schedules referred to in Paragraph 2.05.A, procedures for handling Shop Drawings and other submittals, processing Applications for Payment, and maintaining required records.

B. At this conference Owner and Contractor each shall designate, in writing, a specific individual to act as its authorized representative with respect to the services and responsibilities under the Contract. Such individuals shall have the authority to transmit instructions, receive information, render decisions relative to the Contract, and otherwise act on behalf of each respective party.

2.07 *Initial Acceptance of Schedules*

A. At least 10 days before submission of the first Application for Payment a conference attended by Contractor, Engineer, and others as appropriate will be held to review for acceptability to Engineer as provided below the schedules submitted in accordance with Paragraph 2.05.A. Contractor shall have an additional 10 days to make corrections and adjustments and to complete and resubmit the schedules. No progress payment shall be made to Contractor until acceptable schedules are submitted to Engineer.

Copyright © 2007 National Society of Professional Engineers for EJCDC. All rights reserved.
Revisions highlighted within the text have been prepared by Woodard & Curran on behalf Owner

1. The Progress Schedule will be acceptable to Engineer if it provides an orderly progression of the Work to completion within the Contract Times. Such acceptance will not impose on Engineer responsibility for the Progress Schedule, for sequencing, scheduling, or progress of the Work, nor interfere with or relieve Contractor from Contractor's full responsibility therefor.

2. Contractor's Schedule of Submittals will be acceptable to Engineer if it provides a workable arrangement for reviewing and processing the required submittals.

3. Contractor's Schedule of Values will be acceptable to Engineer as to form and substance if it provides a reasonable allocation of the Contract Price to component parts of the Work.

ARTICLE 3 – CONTRACT DOCUMENTS: INTENT, AMENDING, REUSE

3.01 *Intent*

A. The Contract Documents are complementary; what is required by one is as binding as if required by all and comprise the entire agreement between Owner and Contractor concerning the Work. If any term or provision of any of the Contract Documents, or the application thereof to any party or circumstance shall, to any extent, be determined to be invalid or unenforceable, the remaining provisions of the Contract Documents, or the application of such term or provision to parties or circumstances other than those as to which it is held invalid or unenforceable, shall not be affected thereby, and each term and provision of each of the Contract Documents shall be valid and shall be enforced to the fullest extent permitted by Laws and Regulations.

B. It is the intent of the Contract Documents to describe a functionally complete project (or part thereof) to be constructed in accordance with the Contract Documents. Any labor, documentation, services, materials, or equipment that reasonably may be inferred from the Contract Documents or from prevailing custom or trade usage as being required to produce the indicated result will be provided whether or not specifically called for, at no additional cost to Owner.

C. Clarifications and interpretations of the Contract Documents shall be issued by Engineer as provided in Article 9.

3.02 *Reference Standards*

A. Standards, Specifications, Codes, Laws, and Regulations

1. Reference to standards, specifications, manuals, or codes of any technical society, organization, or association, or to Laws or Regulations, whether such reference be specific or by implication, shall mean the standard, specification, manual, code, or Laws or Regulations in effect at the time of opening of Bids (or on the Effective Date of the Agreement if there were no Bids), except as may be otherwise specifically stated in the Contract Documents.

Copyright © 2007 National Society of Professional Engineers for EJCDC. All rights reserved.
Revisions highlighted within the text have been prepared by Woodard & Curran on behalf Owner

2. No provision of any such standard, specification, manual, or code, or any instruction of a Supplier, shall be effective to change the duties or responsibilities of Owner, Contractor, or Engineer, or any of their subcontractors, consultants, agents, or employees, from those set forth in the Contract Documents. No such provision or instruction shall be effective to assign to Owner, Engineer, or any of their officers, directors, members, partners, employees, agents, consultants, or subcontractors, any duty or authority to supervise or direct the performance of the Work or any duty or authority to undertake responsibility inconsistent with the provisions of the Contract Documents.

3.03 *Reporting and Resolving Discrepancies*

A. Reporting Discrepancies:

1. *Contractor's Review of Contract Documents Before Starting Work*: Before undertaking each part of the Work, Contractor shall carefully study and compare the Contract Documents and check and verify pertinent figures therein and all applicable field measurements. Contractor shall promptly report in writing to Engineer any conflict, error, ambiguity, or discrepancy which Contractor discovers, or has actual knowledge of, and shall obtain a written interpretation or clarification from Engineer before proceeding with any Work affected thereby.

2. *Contractor's Review of Contract Documents During Performance of Work*: If, during the performance of the Work, Contractor discovers any conflict, error, ambiguity, or discrepancy within the Contract Documents, or between the Contract Documents and (a) any applicable Law or Regulation, (b) any standard, specification, manual, or code, or (c) any instruction of any Supplier, then Contractor shall promptly report it to Engineer in writing. Contractor shall not proceed with the Work affected thereby (except in an emergency as required by Paragraph 6.16.A) until an amendment or supplement to the Contract Documents has been issued by one of the methods indicated in Paragraph 3.04.

3. Contractor shall ~~not~~ be liable to Owner or Engineer for failure to report any such conflict, error, ambiguity, or discrepancy in the Contract Documents ~~unless~~ if Contractor ~~had actual knowledge~~knew or reasonably should have known thereof.

B. Resolving Discrepancies:

1. Except as may be otherwise specifically stated in the Contract Documents, the provisions of the Contract Documents shall take precedence in resolving any conflict, error, ambiguity, or discrepancy between the provisions of the Contract Documents and:

   a. the provisions of any standard, specification, manual, or code, or the instruction of any Supplier (whether or not specifically incorporated by reference in the Contract Documents); or

   b. the provisions of any Laws or Regulations applicable to the performance of the Work (unless such an interpretation of the provisions of the Contract Documents would result in violation of such Law or Regulation).

Copyright © 2007 National Society of Professional Engineers for EJCDC. All rights reserved.
Revisions highlighted within the text have been prepared by Woodard & Curran on behalf Owner

3.04 *Amending and Supplementing Contract Documents*

A. The Contract Documents may be amended to provide for additions, deletions, and revisions in the Work or to modify the terms and conditions thereof by either a Change Order or a Work Change Directive.

B. The requirements of the Contract Documents may be supplemented, and minor variations and deviations in the Work may be authorized, by one or more of the following ways:

1. A Field Order;

2. Engineer's approval of a Shop Drawing or Sample (subject to the provisions of Paragraph 6.17.D.3); or

3. Engineer's written interpretation or clarification.

3.05 *Reuse of Documents*

A. Contractor and any Subcontractor or Supplier shall not:

1. have or acquire any title to or ownership rights in any of the Drawings, Specifications, or other documents (or copies of any thereof) prepared by or bearing the seal of Engineer or its consultants, including electronic media editions; or

2. reuse any such Drawings, Specifications, other documents, or copies thereof on extensions of the Project or any other project without written consent of Owner and Engineer and specific written verification or adaptation by Engineer.

B. The prohibitions of this Paragraph 3.05 will survive final payment, or termination of the Contract. Nothing herein shall preclude Contractor from retaining copies of the Contract Documents for record purposes.

3.06 *Electronic Data*

A. ~~Unless otherwise stated in the Supplementary Conditions, t~~The data furnished by Owner or Engineer to Contractor, or by Contractor to Owner or Engineer, that may be relied upon are limited to the printed copies (also known as hard copies), files transmitted in in portable document format (PDF), and other electronic media formats of text, data, graphics or other file types supported by any digital document exchange system implemented for the Project, all of which are understood by all parties to constitute official Project correspondence and submittals . ~~Files in electronic media format of text, data, graphics, or other types are furnished only for the convenience of the receiving party. Any conclusion or information obtained or derived from such electronic files will be at the user's sole risk.~~ If there is a discrepancy between the electronic files and the hard copies, the hard copies govern.

Copyright © 2007 National Society of Professional Engineers for EJCDC. All rights reserved.
Revisions highlighted within the text have been prepared by Woodard & Curran on behalf Owner

B. Because data stored in electronic media format can deteriorate or be modified inadvertently or otherwise without authorization of the data's creator, the party receiving electronic files agrees that it will perform acceptance tests or procedures within 60 days, after which the receiving party shall be deemed to have accepted the data thus transferred. Any errors detected within the 60-day acceptance period will be corrected by the transferring party.

C. When transferring documents in electronic media format, the transferring party makes no representations as to long term compatibility, usability, or readability of documents resulting from the use of software application packages, operating systems, or computer hardware differing from those used by the data's creator.

ARTICLE 4 – AVAILABILITY OF LANDS; SUBSURFACE AND PHYSICAL CONDITIONS; HAZARDOUS ENVIRONMENTAL CONDITIONS; REFERENCE POINTS

4.01 *Availability of Lands*

A. Owner shall furnish the Site. Owner shall notify Contractor of any encumbrances or restrictions not of general application but specifically related to use of the Site with which Contractor must comply in performing the Work. Owner will obtain in a timely manner and pay for easements for permanent structures or permanent changes in existing facilities. If Contractor and Owner are unable to agree on entitlement to or on the amount or extent, if any, of any adjustment in the Contract Price or Contract Times, or both, as a result of any delay in Owner's furnishing the Site or a part thereof, Contractor may make a Claim therefor as provided in Paragraph 10.05.

B. Upon reasonable written request, Owner shall furnish Contractor with a current statement of record legal title and legal description of the lands upon which the Work is to be performed and Owner's interest therein as necessary for giving notice of or filing a mechanic's or construction lien against such lands in accordance with applicable Laws and Regulations.

C. Contractor shall provide for all additional lands and access thereto that may be required for temporary construction facilities or storage of materials and equipment.

4.02 *Subsurface and Physical Conditions*

A. *Reports and Drawings:* The Supplementary Conditions identify:

1. those reports known to Owner of explorations and tests of subsurface conditions at or contiguous to the Site; and

2. those drawings known to Owner of physical conditions relating to existing surface or subsurface structures at the Site (except Underground Facilities).

B. *Limited Reliance by Contractor on Technical Data Authorized:* Contractor may rely upon the accuracy of the "technical data" contained in such reports and drawings, but such reports and drawings are not Contract Documents. Such "technical data" is identified in the Supplementary Conditions. Except for such reliance on such "technical data," Contractor may not rely upon or make any claim against Owner or Engineer, or any of their officers, directors, members, partners, employees, agents, consultants, or subcontractors with respect to:

Copyright © 2007 National Society of Professional Engineers for EJCDC. All rights reserved.
Revisions highlighted within the text have been prepared by Woodard & Curran on behalf Owner

1. the completeness of such reports and drawings for Contractor's purposes, including, but not limited to, any aspects of the means, methods, techniques, sequences, and procedures of construction to be employed by Contractor, and safety precautions and programs incident thereto; or

2. other data, interpretations, opinions, and information contained in such reports or shown or indicated in such drawings; or

3. any Contractor interpretation of or conclusion drawn from any "technical data" or any such other data, interpretations, opinions, or information.

4.03 *Differing Subsurface or Physical Conditions*

A. *Notice:* If Contractor believes that any subsurface or physical condition that is uncovered or revealed either:

1. is of such a nature as to establish that any "technical data" on which Contractor is entitled to rely as provided in Paragraph 4.02 is materially inaccurate; or

2. is of such a nature as to require a change in the Contract Documents; or

3. differs materially from that shown or indicated in the Contract Documents; or

4. is of an unusual nature, and differs materially from conditions ordinarily encountered and generally recognized as inherent in work of the character provided for in the Contract Documents;

then Contractor shall, promptly after becoming aware thereof and before further disturbing the subsurface or physical conditions or performing any Work in connection therewith (except in an emergency as required by Paragraph 6.16.A), notify Owner and Engineer in writing about such condition. Contractor shall not further disturb such condition or perform any Work in connection therewith (except as aforesaid) until receipt of written order to do so.

B. (Not Used)~~*Engineer's Review*: After receipt of written notice as required by Paragraph 4.03.A, Engineer will promptly review the pertinent condition, determine the necessity of Owner's obtaining additional exploration or tests with respect thereto, and advise Owner in writing (with a copy to Contractor) of Engineer's findings and conclusions.~~

C. Possible Price and Times Adjustments:

1. The Contract Price or the Contract Times, or both, ~~will~~ may be equitably adjusted to the extent that the existence of such differing subsurface or physical condition causes an increase or decrease in Contractor's cost of, or time required for, performance of the Work; subject, however, to the following:

a. such condition must meet any one or more of the categories described in Paragraph 4.03.A; and

Copyright © 2007 National Society of Professional Engineers for EJCDC. All rights reserved.
Revisions highlighted within the text have been prepared by Woodard & Curran on behalf Owner

b. with respect to Work that is paid for on a unit price basis, any adjustment in Contract Price will be subject to the provisions of Paragraphs 9.07 and 11.03.

2. Contractor shall not be entitled to any adjustment in the Contract Price or Contract Times if:

a. Contractor knew of the existence of such conditions at the time Contractor made a final commitment to Owner with respect to Contract Price and Contract Times by the submission of a Bid or becoming bound under a negotiated contract; or

b. the existence of such condition could reasonably have been discovered or revealed as a result of any examination, investigation, exploration, test, or study of the Site and contiguous areas required by the Bidding Requirements or Contract Documents to be conducted by or for Contractor prior to Contractor's making such final commitment; ~~or~~

c. Contractor failed to give the written notice as required by Paragraph 4.03.A,or

~~c.~~d. written notice is submitted after final payment.

3. If Owner and Contractor are unable to agree on entitlement to or on the amount or extent, if any, of any adjustment in the Contract Price or Contract Times, or both, a Claim may be made therefor as provided in Paragraph 10.05. However, neither Owner or Engineer, or any of their officers, directors, members, partners, employees, agents, consultants, or subcontractors shall be liable to Contractor for any claims, costs, losses, or damages (including but not limited to all fees and charges of engineers, architects, attorneys, and other professionals and all court or arbitration or other dispute resolution costs) sustained by Contractor on or in connection with any other project or anticipated project.

4.04 *Underground Facilities*

A. *Shown or Indicated:* The information and data shown or indicated in the Contract Documents with respect to existing Underground Facilities at or contiguous to the Site is based on information and data furnished to Owner or Engineer by the owners of such Underground Facilities, including Owner, or by others. Unless it is otherwise expressly provided in the Supplementary Conditions:

1. Owner and Engineer shall not be responsible for the accuracy or completeness of any such information or data provided by others; and

2. the cost of all of the following will be included in the Contract Price, and Contractor shall have full responsibility for:

a. reviewing and checking all such information and data;

b. locating all Underground Facilities shown or indicated in the Contract Documents;

c. coordination of the Work with the owners of such Underground Facilities, including Owner, during construction; and

d. the safety and protection of all such Underground Facilities and repairing any damage thereto resulting from the Work.

Copyright © 2007 National Society of Professional Engineers for EJCDC. All rights reserved.
Revisions highlighted within the text have been prepared by Woodard & Curran on behalf Owner

B. Not Shown or Indicated:

1. If an Underground Facility is uncovered or revealed at or contiguous to the Site which was not shown or indicated, or not shown or indicated with reasonable accuracy in the Contract Documents, Contractor shall, promptly after becoming aware thereof and before further disturbing conditions affected thereby or performing any Work in connection therewith (except in an emergency as required by Paragraph 6.16.A), identify the owner of such Underground Facility and give written notice to that owner and to Owner and Engineer. Engineer will promptly review the Underground Facility and determine the extent, if any, to which a change is required in the Contract Documents to reflect and document the consequences of the existence or location of the Underground Facility. During such time, Contractor shall be responsible for the safety and protection of such Underground Facility.

2. If Engineer concludes that a change in the Contract Documents is required, a Work Change Directive or a Change Order will be issued to reflect and document such consequences. An equitable adjustment shall be made in the Contract Price or Contract Times, or both, to the extent that they are attributable to the existence or location of any Underground Facility that was not shown or indicated ~~or not shown or indicated with reasonable accuracy~~ in the Contract Documents and that Contractor did not know of and could not reasonably have been expected to be aware of or to have anticipated. If Owner and Contractor are unable to agree on entitlement to or on the amount or extent, if any, of any such adjustment in Contract Price or Contract Times, Owner or Contractor may make a Claim therefor as provided in Paragraph 10.05.

3. Owner and Engineer, and the officers, directors, members, partners, employees, agents, consultants and subcontractors of each and any of them, shall not be liable to Contractor for any Claims, losses, or damages incurred by Contractor (including but not limited to all fees and changes of engineers, architects, attorneys, and other professionals and all court or arbitration or other dispute resolution costs) related to Underground Facilities not shown or indicated.

4.05 *Reference Points*

A. Owner shall provide engineering surveys to establish reference points for construction which in Engineer's judgment are necessary to enable Contractor to proceed with the Work. Contractor shall be responsible for laying out the Work, shall protect and preserve the established reference points and property monuments, and shall make no changes or relocations without the prior written approval of Owner. Contractor shall report to Engineer whenever any reference point or property monument is lost or destroyed or requires relocation because of necessary changes in grades or locations, and shall be responsible for the accurate replacement or relocation of such reference points or property monuments by professionally qualified personnel.

4.06 *Hazardous Environmental Condition at Site*

A. *Reports and Drawings:* The Supplementary Conditions identify those reports and drawings known to Owner relating to Hazardous Environmental Conditions that have been identified at the Site.

Copyright © 2007 National Society of Professional Engineers for EJCDC. All rights reserved.
Revisions highlighted within the text have been prepared by Woodard & Curran on behalf Owner

B. *Limited Reliance by Contractor on Technical Data Authorized:* Contractor may rely upon the accuracy of the "technical data" contained in such reports and drawings, but such reports and drawings are not Contract Documents. Such "technical data" is identified in the Supplementary Conditions. Except for such reliance on such "technical data," Contractor may not rely upon or make any claim against Owner or Engineer, or any of their officers, directors, members, partners, employees, agents, consultants, or subcontractors with respect to:

1. the completeness of such reports and drawings for Contractor's purposes, including, but not limited to, any aspects of the means, methods, techniques, sequences and procedures of construction to be employed by Contractor and safety precautions and programs incident thereto; or

2. other data, interpretations, opinions and information contained in such reports or shown or indicated in such drawings; or

3. any Contractor interpretation of or conclusion drawn from any "technical data" or any such other data, interpretations, opinions or information.

C. Contractor shall not be responsible for any Hazardous Environmental Condition uncovered or revealed at the Site which was not shown or indicated in Drawings or Specifications or identified in the Contract Documents to be within the scope of the Work unless Contractor caused or contributed to such Hazardous Environmental Condition. Contractor shall be responsible for a Hazardous Environmental Condition created with any materials brought to the Site by Contractor, Subcontractors, Suppliers, or anyone else for whom Contractor is responsible.

D. If Contractor encounters a Hazardous Environmental Condition or if Contractor or anyone for whom Contractor is responsible creates a Hazardous Environmental Condition, Contractor shall immediately: (i) secure or otherwise isolate such condition; (ii) stop all Work in connection with such condition and in any area affected thereby (except in an emergency as required by Paragraph 6.16.A); and (iii) notify Owner and Engineer (and promptly thereafter confirm such notice in writing). Owner shall promptly consult with Engineer concerning the necessity for Owner to retain a qualified expert to evaluate such condition or take corrective action, if any. Promptly after consulting with Engineer, Owner shall take such actions as are necessary to permit Owner to timely obtain required permits and provide Contractor the written notice required by Paragraph 4.06.E.

E. Contractor shall not be required to resume Work in connection with such condition or in any affected area until after Owner has obtained any required permits related thereto and delivered written notice to Contractor: (i) specifying that such condition and any affected area is or has been rendered safe for the resumption of Work; or (ii) specifying any special conditions under which such Work may be resumed safely. If Owner and Contractor cannot agree as to entitlement to or on the amount or extent, if any, of any adjustment in Contract Price or Contract Times, or both, as a result of such Work stoppage or such special conditions under which Work is agreed to be resumed by Contractor, either party may make a Claim therefor as provided in Paragraph 10.05.

Copyright © 2007 National Society of Professional Engineers for EJCDC. All rights reserved.

F. If after receipt of such written notice Contractor does not agree to resume such Work based on a reasonable belief it is unsafe, or does not agree to resume such Work under such special conditions, then Owner may order the portion of the Work that is in the area affected by such condition to be deleted from the Work. If Owner and Contractor cannot agree as to entitlement to or on the amount or extent, if any, of an adjustment in Contract Price or Contract Times as a result of deleting such portion of the Work, then either party may make a Claim therefor as provided in Paragraph 10.05. Owner may have such deleted portion of the Work performed by Owner's own forces or others in accordance with Article 7.

G. To the fullest extent permitted by Laws and Regulations, Owner shall indemnify and hold harmless Contractor, Subcontractors, and Engineer, and the officers, directors, members, partners, employees, agents, consultants, and subcontractors of each and any of them from and against all claims, costs, losses, and damages (including but not limited to all fees and charges of engineers, architects, attorneys, and other professionals and all court or arbitration or other dispute resolution costs) arising out of or relating to a Hazardous Environmental Condition, provided that such Hazardous Environmental Condition: (i) was not shown or indicated in the Drawings or Specifications or identified in the Contract Documents to be included within the scope of the Work, and (ii) was not created by Contractor or by anyone for whom Contractor is responsible. Nothing in this Paragraph 4.06.G shall obligate Owner to indemnify any individual or entity from and against the consequences of that individual's or entity's own negligence.

H. To the fullest extent permitted by Laws and Regulations, Contractor shall indemnify and hold harmless Owner and Engineer, and the officers, directors, members, partners, employees, agents, consultants, and subcontractors of each and any of them from and against all claims, costs, losses, and damages (including but not limited to all fees and charges of engineers, architects, attorneys, and other professionals and all court or arbitration or other dispute resolution costs) arising out of or relating to a Hazardous Environmental Condition created by Contractor or by anyone for whom Contractor is responsible. Nothing in this Paragraph 4.06.H shall obligate Contractor to indemnify any individual or entity from and against the consequences of that individual's or entity's own negligence.

I. The provisions of Paragraphs 4.02, 4.03, and 4.04 do not apply to a Hazardous Environmental Condition uncovered or revealed at the Site.

ARTICLE 5 – BONDS AND INSURANCE

5.01 *Performance, Payment, and Other Bonds*

A. Contractor shall furnish performance and payment bonds, each in an amount at least equal to the Contract Price as security for the faithful performance and payment of all of Contractor's obligations under the Contract Documents. These bonds shall remain in effect until one year after the date when final payment becomes due or until completion of the correction period specified in Paragraph 13.07, whichever is later, except as provided otherwise by Laws or Regulations or by the Contract Documents. Contractor shall also furnish such other bonds as are required by the Contract Documents.

Copyright © 2007 National Society of Professional Engineers for EJCDC. All rights reserved.
Revisions highlighted within the text have been prepared by Woodard & Curran on behalf Owner

B. All bonds shall be in the form prescribed by the Contract Documents except as provided otherwise by Laws or Regulations, and shall be executed by such sureties as are named in the list of "Companies Holding Certificates of Authority as Acceptable Sureties on Federal Bonds and as Acceptable Reinsuring Companies" as published in Circular 570 (amended) by the Financial Management Service, Surety Bond Branch, U.S. Department of the Treasury. All bonds signed by an agent or attorney-in-fact must be accompanied by a certified copy of that individual's authority to bind the surety. The evidence of authority shall show that it is effective on the date the agent or attorney-in-fact signed each bond.

C. If the surety on any bond furnished by Contractor is declared bankrupt or becomes insolvent or its right to do business is terminated in any state where any part of the Project is located or it ceases to meet the requirements of Paragraph 5.01.B, Contractor shall promptly notify Owner and Engineer and shall, within ~~20~~ 5 days after the event giving rise to such notification, provide another bond and surety, both of which shall comply with the requirements of Paragraphs 5.01.B and 5.02.

5.02 *Licensed Sureties and Insurers*

A. All bonds and insurance required by the Contract Documents to be purchased and maintained by Owner or Contractor shall be obtained from surety or insurance companies that are duly licensed or authorized in the jurisdiction in which the Project is located to issue bonds or insurance policies for the limits and coverages so required. Such surety and insurance companies shall also meet such additional requirements and qualifications as may be provided in the Supplementary Conditions.

5.03 *Certificates of Insurance*

A. Contractor shall deliver to Owner, with copies to each additional insured and loss payee identified in the Supplementary Conditions, certificates of insurance (and other evidence of insurance requested by Owner or any other additional insured) which Contractor is required to purchase and maintain.

B. Owner shall deliver to Contractor, with copies to each additional insured and loss payee identified in the Supplementary Conditions, certificates of insurance (and other evidence of insurance requested by Contractor or any other additional insured) which Owner is required to purchase and maintain.

C. Failure of Owner to demand such certificates or other evidence of Contractor's full compliance with these insurance requirements or failure of Owner to identify a deficiency in compliance from the evidence provided shall not be construed as a waiver of Contractor's obligation to maintain such insurance.

D. Owner does not represent that insurance coverage and limits established in this Contract necessarily will be adequate to protect Contractor.

E. The insurance and insurance limits required herein shall not be deemed as a limitation on Contractor's liability under the indemnities granted to Owner in the Contract Documents.

Copyright © 2007 National Society of Professional Engineers for EJCDC. All rights reserved.
Revisions highlighted within the text have been prepared by Woodard & Curran on behalf Owner

5.04 *Contractor's Insurance*

A. Contractor shall purchase and maintain such insurance as is appropriate for the Work being performed, complies with the requirements of Article 5, and as will provide protection from claims set forth below which may arise out of or result from Contractor's performance of the Work and Contractor's other obligations under the Contract Documents, whether it is to be performed by Contractor, any Subcontractor or Supplier, or by anyone directly or indirectly employed by any of them to perform any of the Work, or by anyone for whose acts any of them may be liable:

1. claims under workers' compensation, disability benefits, and other similar employee benefit acts;

2. claims for damages because of bodily injury, occupational sickness or disease, or death of Contractor's employees;

3. claims for damages because of bodily injury, sickness or disease, or death of any person other than Contractor's employees;

4. claims for damages insured by reasonably available personal injury liability coverage which are sustained:

   a. by any person as a result of an offense directly or indirectly related to the employment of such person by Contractor, or

   b. by any other person for any other reason;

5. claims for damages, other than to the Work itself, because of injury to or destruction of tangible property wherever located, including loss of use resulting therefrom; ~~and~~

6. claims for damages because of bodily injury or death of any person or property damage arising out of the ownership, maintenance or use of any motor vehicle~~.~~;

7. claims arising out of violation of Laws or Regulations; and

8. claims for damages because of negligent acts, errors and omissions arising out of performing or providing professional services.

B. The policies of insurance required by this Paragraph 5.04 shall:

1. with respect to insurance required by Paragraphs 5.04.A.3 through 5.04.A.~~6~~7 inclusive, be written on an occurrence basis, include as additional insureds by endorsement (subject to any customary exclusion regarding professional liability) Owner and Engineer, and any other individuals or entities identified in the Supplementary Conditions, all of whom shall be ~~listed~~ included as additional insureds by endorsement, and include coverage for the respective officers, directors, members, partners, employees, agents, consultants, and subcontractors of each and any of all such additional insureds, and the insurance afforded to these additional insureds shall provide primary coverage for all claims covered thereby;

Copyright © 2007 National Society of Professional Engineers for EJCDC. All rights reserved.
Revisions highlighted within the text have been prepared by Woodard & Curran on behalf Owner

2. include at least the specific coverages and be written for not less than the limits of liability provided herein and in the Supplementary Conditions or required by Laws or Regulations, whichever is greater;

3. include contractual liability insurance covering Contractor's indemnity obligations under Paragraphs 6.11 and 6.20;

4. contain a provision or endorsement that the coverage afforded will not be canceled, materially changed or renewal refused until at least 30 days prior written notice has been given to Owner and Contractor and to each other additional insured identified in the Supplementary Conditions to whom a certificate of insurance has been issued (and the certificates of insurance furnished by the Contractor pursuant to Paragraph 5.03 will so provide) and will contain waiver provisions in accordance with Paragraph 5.07;

5. remain in effect at least until final payment and at all times thereafter when Contractor may be correcting, removing, or replacing defective Work in accordance with Paragraph 13.07; and

6. include completed operations coverage:

   a. Such insurance shall remain in effect for two years after final payment.

   b. Contractor shall furnish Owner and each other additional insured identified in the Supplementary Conditions, to whom a certificate of insurance has been issued, evidence satisfactory to Owner and any such additional insured of continuation of such insurance at final payment and one year thereafter.

7. In the event general liability insurance is provided on a claims-made policy, the retroactive date of such policy shall not be later than the date of the Notice to Proceed or the Effective Date of the Agreement, whichever is earlier. For construction periods extending beyond the expiration date of an initial claims-made policy, the retroactive date of all subsequent claims-made policies shall not be later than the date of the Notice to Proceed.

C. The limits of liability for the insurance required by Paragraph 5.04 of the General Conditions shall provide coverage for not less than the following amounts or greater where required by Laws and Regulations:

1. Workers' Compensation and related coverage:

Minimum limit of liability	Statutory
Applicable Federal (e.g., Longshoreman's)	Statutory
Employer's Liability	$1,000,000

Copyright © 2007 National Society of Professional Engineers for EJCDC. All rights reserved.

2. Contractor's General Liability:

$1,000,000 per occurrence; $2,000,000 general aggregate; $2,000,000 per project aggregate, including:

- Broad Form Property Damage Liability including coverage for acts of terrorism
- Completed Operations and Product Liability
- Contractual Liability
- Independent Contractors
- Explosion, Collapse & Underground Hazards
- Personal Injury Coverage, Exclusion Deleted
- Fire Legal Liability - $1,000,000
- Medical payments - $1,000,000

Pollution Liability (covering third-party injury and property damage claims, including clean-up costs, as a result of pollution conditions arising from the Contractor's operations and completed operations maintained for no less than three years after final completion): $1,000,000

Excess or Umbrella Liability: $5,000,000 per occurrence; $5,000,000 general aggregate

3. Automobile Liability under Paragraph 5.04.A.6 of the General Conditions:

Combined Single Limit of $1,000,000 for bodily injury & property damage covering Contractor and any vehicles owned, hired and non-owned by the Contractor

4. Professional Liability (E&O for engineers, architects or surveyors): $1,000,000 for each claim with an annual aggregate of at least $2,000,000 if professional services are required under the Specifications

5. Owners Protective Liability: as may be specified in the Supplementary Conditions

Any self-insured retention (not allowed for Worker's Compensation) and/or deductibles must be identified and cannot exceed $100,000 per occurrence without the prior approval of the Owner. Contractor must provide either an audited financial statement to confirm solvency or a letter of credit guaranteeing the $100,000 in case of loss for the duration of the Project and for the Correction Period.

Copyright © 2007 National Society of Professional Engineers for EJCDC. All rights reserved.

5.05 *Owner's Liability Insurance*

A. In addition to the insurance required to be provided by Contractor under Paragraph 5.04, Owner, at Owner's option, may purchase and maintain at Owner's expense Owner's own liability insurance as will protect Owner against claims which may arise from operations (ongoing and completed) under the Contract Documents.

5.06 *Property Insurance*

A. Unless otherwise provided in the Supplementary Conditions, Owner may, in its discretion, purchase and maintain property insurance upon the Work at the Site. Contractor shall purchase and maintain property insurance upon the Work at the Site in the amount of the full replacement cost thereof. Contractor shall be responsible for any (subject to such deductible amounts or self-insured retention as may be provided in the Supplementary Conditions or required by Laws and Regulations). This insurance shall:

1. include the interests of Owner, Contractor, Subcontractors, and Engineer, and any other individuals or entities identified in the Supplementary Conditions, and the officers, directors, members, partners, employees, agents, consultants, and subcontractors of each and any of them, each of whom is deemed to have an insurable interest and shall be listed as a loss payee;

2. be written on a Builder's Risk "all-risk"Special Forms policy form that shall at least include insurance for physical loss or damage to the Work, temporary buildings, falsework, and materials and equipment in transit, and shall insure against at least the following special form perils or causes of loss, including but not limited to: fire, lightning, flood, extended coverage, theft, vandalism and malicious mischief, earthquake, collapse, debris removal, demolition occasioned by enforcement of Laws and Regulations, water damage (other than that caused by flood), and such other perils or causes of loss as may be specifically required by the Supplementary Conditions.

3. include expenses incurred in the repair or replacement of any insured property (including but not limited to fees and charges of engineers and architects);

4. cover materials and equipment stored at the Site or at another location that was agreed to in writing by Owner prior to being incorporated in the Work, provided that such materials and equipment have been included in an Application for Payment recommended by Engineer;

5. allow for partial utilization of the Work by Owner;

6. include testing and startup; and

7. be maintained in effect until final payment is made unless otherwise agreed to in writing by Owner, Contractor, and Engineer with 30 days written notice to each other loss payee to whom a certificate of insurance has been issued; and

7.8. comply with the requirements of Paragraph 5.06.C of the General Conditions.

Copyright © 2007 National Society of Professional Engineers for EJCDC. All rights reserved.
Revisions highlighted within the text have been prepared by Woodard & Curran on behalf Owner

B. (Not used)~~Owner shall purchase and maintain such equipment breakdown insurance or additional property insurance as may be required by the Supplementary Conditions or Laws and Regulations which will include the interests of Owner, Contractor, Subcontractors, and Engineer, and any other individuals or entities identified in the Supplementary Conditions, and the officers, directors, members, partners, employees, agents, consultants and subcontractors of each and any of them, each of whom is deemed to have an insurable interest and shall be listed as a loss payee.~~

C. All the policies of insurance (and the certificates or other evidence thereof) required to be purchased and maintained in accordance with this Paragraph 5.06 will contain a provision or endorsement that the coverage afforded will not be canceled or materially changed or renewal refused until at least 30 days prior written notice has been given to Owner and Contractor and to each other loss payee to whom a certificate of insurance has been issued and will contain waiver provisions in accordance with Paragraph 5.07.

D. Owner shall not be responsible for purchasing and maintaining any property insurance specified in this Paragraph 5.06 to protect the interests of Contractor, Subcontractors, or others in the Work. ~~to the extent of any deductible amounts that are identified in the Supplementary Conditions.~~ The risk of loss within such identified deductible amount will be borne by Contractor, Subcontractors, or others suffering any such loss. ~~, and if any of them wishes property insurance coverage within the limits of such amounts, each may purchase and maintain it at the purchaser's own expense.~~

E. If Contractor requests in writing that other special insurance be included in the property insurance policies provided under this Paragraph 5.06, Owner shall, if possible, include such insurance, and the cost thereof will be charged to Contractor by appropriate Change Order. Prior to commencement of the Work at the Site, Owner shall in writing advise Contractor whether or not such other insurance has been procured by Owner.

5.07 *Waiver of Rights*

A. Owner and Contractor intend that all policies purchased in accordance with Paragraph 5.06 will protect Owner, Contractor, Subcontractors, and Engineer, and all other individuals or entities identified in the Supplementary Conditions as loss payees (and the officers, directors, members, partners, employees, agents, consultants, and subcontractors of each and any of them) in such policies and will provide primary coverage for all losses and damages caused by the perils or causes of loss covered thereby. All such policies shall contain provisions to the effect that in the event of payment of any loss or damage the insurers will have no rights of recovery against any of the insureds or loss payees thereunder. Owner and Contractor waive all rights against each other and their respective officers, directors, members, partners, employees, agents, consultants and subcontractors of each and any of them for all losses and damages caused by, arising out of or resulting from any of the perils or causes of loss covered by such policies and any other property insurance applicable to the Work; and, in addition, waive all such rights against Subcontractors and Engineer, and all other individuals or entities identified in the Supplementary Conditions as loss payees (and the officers, directors, members, partners, employees, agents, consultants, and subcontractors of each and any of them) under such policies for losses and damages so caused. None of the above waivers shall extend to the rights that any party making such waiver may have to the proceeds of insurance held by Owner as trustee or otherwise payable under any policy so issued.

Copyright © 2007 National Society of Professional Engineers for EJCDC. All rights reserved.
Revisions highlighted within the text have been prepared by Woodard & Curran on behalf Owner

B. Owner waives all rights against Contractor, Subcontractors, and Engineer, and the officers, directors, members, partners, employees, agents, consultants and subcontractors of each and any of them for:

1. loss due to business interruption, loss of use, or other consequential loss extending beyond direct physical loss or damage to Owner's property or the Work caused by, arising out of, or resulting from fire or other perils whether or not insured by Owner; and

2. loss or damage to the completed Project or part thereof caused by, arising out of, or resulting from fire or other insured peril or cause of loss covered by any property insurance maintained on the completed Project or part thereof by Owner during partial utilization pursuant to Paragraph 14.05, after Substantial Completion pursuant to Paragraph 14.04, or after final payment pursuant to Paragraph 14.07.

C. Any insurance policy maintained by Owner covering any loss, damage or consequential loss referred to in Paragraph 5.07.B shall contain provisions to the effect that in the event of payment of any such loss, damage, or consequential loss, the insurers will have no rights of recovery against Contractor, Subcontractors, or Engineer, and the officers, directors, members, partners, employees, agents, consultants and subcontractors of each and any of them.

5.08 *Receipt and Application of Insurance Proceeds (Not used)*

~~. Any insured loss under the policies of insurance required by Paragraph 5.06 will be adjusted with Owner and made payable to Owner as fiduciary for the loss payees, as their interests may appear, subject to the requirements of any applicable mortgage clause and of Paragraph 5.08.B. Owner shall deposit in a separate account any money so received and shall distribute it in accordance with such agreement as the parties in interest may reach. If no other special agreement is reached, the damaged Work shall be repaired or replaced, the moneys so received applied on account thereof, and the Work and the cost thereof covered by an appropriate Change Order~~.

~~. Owner as fiduciary shall have power to adjust and settle any loss with the insurers unless one of the parties in interest shall object in writing within 15 days after the occurrence of loss to Owner's exercise of this power. If such objection be made, Owner as fiduciary shall make settlement with the insurers in accordance with such agreement as the parties in interest may reach. If no such agreement among the parties in interest is reached, Owner as fiduciary shall adjust and settle the loss with the insurers and, if required in writing by any party in interest, Owner as fiduciary shall give bond for the proper performance of such duties.~~

~~5.11~~5.09 *Acceptance of Bonds and Insurance; Option to Replace*

A. If ~~either~~ Owner ~~or Contractor~~ has any objection to the coverage afforded by or other provisions of the bonds or insurance required to be purchased and maintained by the ~~other party~~ Contractor in accordance with Article 5 on the basis of non-conformance with the Contract Documents, the ~~objecting party~~Owner shall so notify the ~~other party~~Contractor in writing within 10 days after receipt of the certificates (or other evidence requested) required by Paragraph 2.01.B. ~~Owner and~~ Contractor shall ~~each~~ provide to the ~~other~~ Owner, such additional information in respect of insurance provided as ~~the other~~ may be reasonably requested. If ~~either party~~Contractor does not purchase or maintain all of the bonds and insurance required ~~of such party~~ by the Contract

Copyright © 2007 National Society of Professional Engineers for EJCDC. All rights reserved.

Documents, ~~such party~~Contractor shall notify the ~~other party~~Owner in writing of such failure to purchase prior to the start of the Work, or of such failure to maintain prior to any change in the required coverage. Without prejudice to any other right or remedy, the ~~other party~~Owner may elect to obtain equivalent bonds or insurance to protect ~~such other party's~~Owner's interests at the expense of the ~~party~~ Contractor~~who was required to provide such coverage~~, and a Change Order shall be issued to adjust the Contract Price accordingly.

~~5.12~~5.10 *Partial Utilization, Acknowledgment of Property Insurer*

A. If Owner finds it necessary to occupy or use a portion or portions of the Work prior to Substantial Completion of all the Work as provided in Paragraph 14.05, no such use or occupancy shall commence before the insurers providing the property insurance pursuant to Paragraph 5.06 have acknowledged notice thereof and in writing effected any changes in coverage necessitated thereby. The insurers providing the property insurance shall consent by endorsement on the policy or policies, but the property insurance shall not be canceled or permitted to lapse on account of any such partial use or occupancy.

ARTICLE 6 – CONTRACTOR'S RESPONSIBILITIES

6.01 *Supervision and Superintendence*

A. Contractor shall supervise, inspect, and direct the Work competently and efficiently, devoting such attention thereto and applying such skills and expertise as may be necessary to perform the Work in accordance with the Contract Documents. Contractor shall be solely responsible for the means, methods, techniques, sequences, and procedures of construction. Contractor shall not be responsible for the negligence of Owner or Engineer in the design or specification of a specific means, method, technique, sequence, or procedure of construction which is shown or indicated in and expressly required by the Contract Documents.

B. At all times during the progress of the Work, Contractor shall assign a competent resident superintendent who shall not be replaced without written notice to Owner and Engineer except under extraordinary circumstances.

6.02 *Labor; Working Hours*

A. Contractor shall provide competent, suitably qualified personnel to survey and lay out the Work and perform construction as required by the Contract Documents. Contractor shall at all times maintain good discipline and order at the Site.

B. Except as otherwise required for the safety or protection of persons or the Work or property at the Site or adjacent thereto, and except as otherwise stated in the Contract Documents, all Work at the Site shall be performed during regular working hours. Contractor will not permit the performance of Work on a Saturday, Sunday, or any legal holiday without Owner's written consent (which will not be unreasonably withheld) given after prior written notice to Engineer.

Copyright © 2007 National Society of Professional Engineers for EJCDC. All rights reserved.
Revisions highlighted within the text have been prepared by Woodard & Curran on behalf Owner

6.03 *Services, Materials, and Equipment*

A. Unless otherwise specified in the Contract Documents, Contractor shall provide and assume full responsibility for all services, materials, equipment, labor, transportation, construction equipment and machinery, tools, appliances, fuel, power, light, heat, telephone, water, sanitary facilities, temporary facilities, and all other facilities and incidentals necessary for the performance, testing, start-up, and completion of the Work.

B. All materials and equipment incorporated into the Work shall be as specified or, if not specified, shall be of good quality and new, except as otherwise provided in the Contract Documents. All special warranties and guarantees required by the Specifications shall expressly run to the benefit of Owner. If required by Engineer, Contractor shall furnish satisfactory evidence (including reports of required tests) as to the source, kind, and quality of materials and equipment.

C. All materials and equipment shall be stored, applied, installed, connected, erected, protected, used, cleaned, and conditioned in accordance with instructions of the applicable Supplier, except as otherwise may be provided in the Contract Documents.

D. Provision of any instructions:

1. will not be effective to assign to Owner, or any of Owner's consultants, agents or employees, any duty or authority to supervise or direct the furnishing or performance of the Work or any duty or authority to undertake responsibility contrary to the provisions of Paragraph 8.09; and

2. will not be effective to assign to Engineer, or any of Engineer's consultants, agents or employees, any duty or authority to supervise or direct the furnishing or performance of the Work or any duty or authority to undertake responsibility contrary to the provisions of Paragraph 9.09.

6.04 *Progress Schedule*

A. Contractor shall adhere to the Progress Schedule established in accordance with Paragraph 2.07 as it may be adjusted from time to time as provided below.

1. Contractor shall submit to Engineer for acceptance (to the extent indicated in Paragraph 2.07) proposed adjustments in the Progress Schedule that will not result in changing the Contract Times. Such adjustments will comply with any provisions of the General Requirements applicable thereto.

2. Proposed adjustments in the Progress Schedule that will change the Contract Times shall be submitted in accordance with the requirements of Article 12. Adjustments in Contract Times may only be made by a Change Order.

Copyright © 2007 National Society of Professional Engineers for EJCDC. All rights reserved.
Revisions highlighted within the text have been prepared by Woodard & Curran on behalf Owner

6.05 *Substitutes and "Or-Equals"*

A. Whenever an item of material or equipment is specified or described in the Contract Documents by using the name of a proprietary item, make or catalogue number, or the name of a particular Supplier, the specification or description is intended to establish the type, function, appearance, and quality required. Unless the specification or description contains or is followed by words reading that no like, equivalent, or "or-equal" item or no substitution is permitted, other items of material or equipment or material or equipment of other Suppliers may be submitted to Engineer for review under the circumstances described below.

1. *"Or-Equal" Items:* If in Engineer's sole discretion an item of material or equipment proposed by Contractor is functionally equal to that named and sufficiently similar so that no change in related Work will be required, it may be considered by Engineer as an "or-equal" item, in which case review and approval of the proposed item may, in Engineer's sole discretion, be accomplished without compliance with some or all of the requirements for approval of proposed substitute items. For the purposes of this Paragraph 6.05.A.1, a proposed item of material or equipment will be considered functionally equal to an item so named if:

   a. in the exercise of reasonable judgment Engineer determines that:

      1) it is at least equal in materials of construction, quality, durability, appearance, strength, and design characteristics;

      2) it will reliably perform at least equally well the function and achieve the results imposed by the design concept of the completed Project as a functioning whole; and

      3) it has a proven record of performance and availability of responsive service.

   b. Contractor certifies that, if approved and incorporated into the Work:

      1) there will be no increase in cost to the Owner or increase in Contract Times; and

      2) it will conform substantially to the detailed requirements of the item named in the Contract Documents.

2. Substitute Items:

   a. If in Engineer's sole discretion an item of material or equipment proposed by Contractor does not qualify as an "or-equal" item under Paragraph 6.05.A.1, it will be considered a proposed substitute item.

Copyright © 2007 National Society of Professional Engineers for EJCDC. All rights reserved.
Revisions highlighted within the text have been prepared by Woodard & Curran on behalf Owner

b. Contractor shall submit sufficient information as provided below to allow Engineer to determine if the item of material or equipment proposed is essentially equivalent to that named and an acceptable substitute therefor. Requests for review of proposed substitute items of material or equipment will not be accepted by Engineer from anyone other than Contractor.

c. The requirements for review by Engineer will be as set forth in Paragraph 6.05.A.2.d, as supplemented by the General Requirements, and as Engineer may decide is appropriate under the circumstances.

d. Contractor shall make written application to Engineer for review of a proposed substitute item of material or equipment that Contractor seeks to furnish or use. The application:

1) shall certify that the proposed substitute item will:

a) perform adequately the functions and achieve the results called for by the general design,

b) be similar in substance to that specified, and

c) be suited to the same use as that specified;

2) will state:

a) the extent, if any, to which the use of the proposed substitute item will prejudice Contractor's achievement of Substantial Completion on time,

b) whether use of the proposed substitute item in the Work will require a change in any of the Contract Documents (or in the provisions of any other direct contract with Owner for other work on the Project) to adapt the design to the proposed substitute item, and

c) whether incorporation or use of the proposed substitute item in connection with the Work is subject to payment of any license fee or royalty;

3) will identify:

a) all variations of the proposed substitute item from that specified, and

b) available engineering, sales, maintenance, repair, and replacement services; and

4) shall contain an itemized estimate of all costs or credits that will result directly or indirectly from use of such substitute item, including costs of redesign and claims of other contractors affected by any resulting change.

Copyright © 2007 National Society of Professional Engineers for EJCDC. All rights reserved.
Revisions highlighted within the text have been prepared by Woodard & Curran on behalf Owner

B. *Substitute Construction Methods or Procedures:* If a specific means, method, technique, sequence, or procedure of construction is expressly required by the Contract Documents, Contractor may furnish or utilize a substitute means, method, technique, sequence, or procedure of construction approved by Engineer. Contractor shall submit sufficient information to allow Engineer, in Engineer's sole discretion, to determine that the substitute proposed is equivalent to that expressly called for by the Contract Documents. The requirements for review by Engineer will be similar to those provided in Paragraph 6.05.A.2.

C. *Engineer's Evaluation:* Engineer will be allowed a reasonable time within which to evaluate each proposal or submittal made pursuant to Paragraphs 6.05.A and 6.05.B. Engineer may require Contractor to furnish additional data about the proposed substitute item. Engineer will be the sole judge of acceptability. No "or equal" or substitute will be ordered, installed or utilized until Engineer's review is complete, which will be evidenced by a Change Order in the case of a substitute and an approved Shop Drawing for an "or equal." Engineer will advise Contractor in writing of any negative determination.

D. *Special Guarantee:* Owner may require Contractor to furnish at Contractor's expense a special performance guarantee or other surety with respect to any substitute.

E. *Engineer's Cost Reimbursement*: Engineer will record Engineer's costs in evaluating a substitute proposed or submitted by Contractor pursuant to Paragraphs 6.05.A.2 and 6.05.B. Whether or not Engineer approves a substitute so proposed or submitted by Contractor, Contractor shall reimburse Owner for the reasonable charges of Engineer for evaluating each such proposed substitute. Contractor shall also reimburse Owner for the reasonable charges of Engineer for making changes in the Contract Documents (or in the provisions of any other direct contract with Owner) resulting from the acceptance of each proposed substitute.

F. *Contractor's Expense*: Contractor shall provide all data in support of any proposed substitute or "or-equal" at Contractor's expense.

6.06 *Concerning Subcontractors, Suppliers, and Others*

A. Contractor shall not employ any Subcontractor, Supplier, or other individual or entity (including those acceptable to Owner as indicated in Paragraph 6.06.B), whether initially or as a replacement, against whom Owner may have reasonable objection. Contractor shall not be required to employ any Subcontractor, Supplier, or other individual or entity to furnish or perform any of the Work against whom Contractor has reasonable objection.

B. If the Bidding Requirements or Supplementary Conditions require the identity of certain Subcontractors, Suppliers, or other individuals or entities to be submitted to Owner in advance for acceptance by Owner by a specified date prior to the Effective Date of the Agreement, and ~~if~~ the Contractor has submitted a list thereof in accordance with the Bidding Requirements or Supplementary Conditions (which shall be included as an attachment to the Agreement), Owner's acceptance (either in writing or by failing to make written objection thereto by the date indicated for acceptance or objection in the Bidding Documents or the Contract Documents) of any such Subcontractor, Supplier, or other individual or entity so identified may be revoked on the basis of reasonable objection after due investigation. Contractor shall submit an acceptable replacement for the rejected Subcontractor, Supplier, or other individual or entity, and the Contract Price will

Copyright © 2007 National Society of Professional Engineers for EJCDC. All rights reserved.
Revisions highlighted within the text have been prepared by Woodard & Curran on behalf Owner

be adjusted by the difference in the cost occasioned by such replacement, and an appropriate Change Order will be issued. No acceptance by Owner of any such Subcontractor, Supplier, or other individual or entity, whether initially or as a replacement, shall constitute a waiver of any right of Owner or Engineer to reject defective Work.

C. Contractor shall be fully responsible to Owner and Engineer for all acts and omissions of the Subcontractors, Suppliers, and other individuals or entities performing or furnishing any of the Work just as Contractor is responsible for Contractor's own acts and omissions. Nothing in the Contract Documents:

1. shall create for the benefit of any such Subcontractor, Supplier, or other individual or entity any contractual relationship between Owner or Engineer and any such Subcontractor, Supplier or other individual or entity; nor

2. shall create any obligation on the part of Owner or Engineer to pay or to see to the payment of any moneys due any such Subcontractor, Supplier, or other individual or entity except as may otherwise be required by Laws and Regulations.

D. Contractor shall be solely responsible for scheduling and coordinating the Work of Subcontractors, Suppliers, and other individuals or entities performing or furnishing any of the Work under a direct or indirect contract with Contractor.

E. Contractor shall require all Subcontractors, Suppliers, and such other individuals or entities performing or furnishing any of the Work to communicate with Engineer through Contractor.

F. The divisions and sections of the Specifications and the identifications of any Drawings shall not control Contractor in dividing the Work among Subcontractors or Suppliers or delineating the Work to be performed by any specific trade.

G. All Work performed for Contractor by a Subcontractor or Supplier will be pursuant to an appropriate agreement between Contractor and the Subcontractor or Supplier which specifically binds the Subcontractor or Supplier to the applicable terms and conditions of the Contract Documents for the benefit of Owner and Engineer.

1. Whenever any such agreement is with a Subcontractor or Supplier who is listed as a loss payee on the property insurance provided in Paragraph 5.06, the agreement between the Contractor and the Subcontractor or Supplier will contain provisions whereby the Subcontractor or Supplier waives all rights against Owner, Contractor, Engineer, and all other individuals or entities identified in the Supplementary Conditions to be listed as insureds or loss payees (and the officers, directors, members, partners, employees, agents, consultants, and subcontractors of each and any of them) for all losses and damages caused by, arising out of, relating to, or resulting from any of the perils or causes of loss covered by such policies and any other property insurance applicable to the Work. If the insurers on any such policies require separate waiver forms to be signed by any Subcontractor or Supplier, Contractor will obtain the same.

Copyright © 2007 National Society of Professional Engineers for EJCDC. All rights reserved.
Revisions highlighted within the text have been prepared by Woodard & Curran on behalf Owner

2. Such agreement between Contractor and the Subcontractor or Supplier shall specifically include dispute resolution provisions similar to those in Article 16 (if any) and provisions required by Laws and Regulations identified in the various Supplementary Conditions.

6.07 *Patent Fees and Royalties*

A. Contractor shall pay all license fees and royalties and assume all costs incident to the use in the performance of the Work or the incorporation in the Work of any invention, design, process, product, or device which is the subject of patent rights or copyrights held by others. If a particular invention, design, process, product, or device is specified in the Contract Documents for use in the performance of the Work and if, to the actual knowledge of Owner or Engineer, its use is subject to patent rights or copyrights calling for the payment of any license fee or royalty to others, the existence of such rights shall be disclosed by Owner in the Contract Documents.

B. To the fullest extent permitted by Laws and Regulations, Owner shall indemnify and hold harmless Contractor, and its officers, directors, members, partners, employees, agents, consultants, and subcontractors from and against all claims, costs, losses, and damages (including but not limited to all fees and charges of engineers, architects, attorneys, and other professionals, and all court or arbitration or other dispute resolution costs) arising out of or relating to any infringement of patent rights or copyrights incident to the use in the performance of the Work or resulting from the incorporation in the Work of any invention, design, process, product, or device specified in the Contract Documents, but not identified as being subject to payment of any license fee or royalty to others required by patent rights or copyrights.

C. To the fullest extent permitted by Laws and Regulations, Contractor shall indemnify and hold harmless Owner and Engineer, and the officers, directors, members, partners, employees, agents, consultants and subcontractors of each and any of them from and against all claims, costs, losses, and damages (including but not limited to all fees and charges of engineers, architects, attorneys, and other professionals and all court or arbitration or other dispute resolution costs) arising out of or relating to any infringement of patent rights or copyrights incident to the use in the performance of the Work or resulting from the incorporation in the Work of any invention, design, process, product, or device not specified in the Contract Documents.

D. At the Owner's option, Contractor shall defend claims in connection with any alleged infringement of such rights.

6.08 *Permits*

A. Unless otherwise provided in the Supplementary Conditions, Contractor shall obtain and pay for all construction permits and licenses. Owner shall assist Contractor, when necessary, in obtaining such permits and licenses. Contractor shall pay all governmental charges and inspection fees necessary for the prosecution of the Work which are applicable at the time of opening of Bids, or, if there are no Bids, on the Effective Date of the Agreement. Owner shall pay all charges of utility owners for connections for providing permanent service to the Work.

Copyright © 2007 National Society of Professional Engineers for EJCDC. All rights reserved.
Revisions highlighted within the text have been prepared by Woodard & Curran on behalf Owner

6.09 *Laws and Regulations*

A. Contractor shall give all notices required by and shall comply with all Laws and Regulations applicable to the performance of the Work. Except where otherwise expressly required by applicable Laws and Regulations, neither Owner nor Engineer shall be responsible for monitoring Contractor's compliance with any Laws or Regulations.

B. If Contractor observes that the Specifications or Drawings are at variance with any Laws or Regulations, Contractor shall give Engineer prompt written notice thereof, and any necessary changes will be authorized by one of the methods set forth in Paragraph 3.04. If Contractor performs any Work knowing or having reason to know that it is contrary to Laws or Regulations, Contractor shall bear all claims, costs, losses, and damages (including but not limited to all fees and charges of engineers, architects, attorneys, and other professionals and all court or arbitration or other dispute resolution costs) arising out of or relating to such Work. However, it shall not be Contractor's responsibility to make certain that the Specifications and Drawings are in accordance with Laws and Regulations, but this shall not relieve Contractor of Contractor's obligations under Paragraph 3.03.

C. Changes in Laws or Regulations not known at the time of opening of Bids (or, on the Effective Date of the Agreement if there were no Bids) having an effect on the cost or time of performance of the Work shall be the subject of an adjustment in Contract Price or Contract Times. If Owner and Contractor are unable to agree on entitlement to or on the amount or extent, if any, of any such adjustment, a Claim may be made therefor as provided in Paragraph 10.05.

6.10 *Taxes*

A. Contractor shall pay all sales, consumer, use, and other similar taxes required to be paid by Contractor in accordance with the Laws and Regulations of the place of the Project which are applicable during the performance of the Work.

B. If Owner is sales tax exempt, specific provisions shall be as set forth in the Supplementary Conditions.

6.11 *Use of Site and Other Areas*

A. Limitation on Use of Site and Other Areas:

1. Contractor shall confine construction equipment, the storage of materials and equipment, and the operations of workers to the Site and other areas permitted by Laws and Regulations, and shall not unreasonably encumber the Site and other areas with construction equipment or other materials or equipment. Contractor shall assume full responsibility for any damage to any such land or area, or to the owner or occupant thereof, or of any adjacent land or areas resulting from the performance of the Work.

Copyright © 2007 National Society of Professional Engineers for EJCDC. All rights reserved.
Revisions highlighted within the text have been prepared by Woodard & Curran on behalf Owner

2. Should any claim be made by any such owner or occupant because of the performance of the Work, Contractor shall promptly settle with such other party by negotiation or otherwise resolve the claim by arbitration or other dispute resolution proceeding or at law.

3. To the fullest extent permitted by Laws and Regulations, Contractor shall indemnify and hold harmless Owner and Engineer, and the officers, directors, members, partners, employees, agents, consultants and subcontractors of each and any of them from and against all claims, costs, losses, and damages (including but not limited to all fees and charges of engineers, architects, attorneys, and other professionals and all court or arbitration or other dispute resolution costs) arising out of or relating to any claim or action, legal or equitable, brought by any such owner or occupant against Owner, Engineer, or any other party indemnified hereunder to the extent caused by or based upon Contractor's performance of the Work.

B. *Removal of Debris During Performance of the Work:* During the progress of the Work Contractor shall keep the Site and other areas free from accumulations of waste materials, rubbish, and other debris. Removal and disposal of such waste materials, rubbish, and other debris shall conform to applicable Laws and Regulations.

C. *Cleaning:* Prior to Substantial Completion of the Work Contractor shall clean the Site and the Work and make it ready for utilization by Owner. At the completion of the Work, Contractor shall remove from the Site all tools, appliances, construction equipment and machinery, and surplus materials and shall restore to original condition all property not designated for alteration by the Contract Documents.

D. *Loading Structures:* Contractor shall not load nor permit any part of any structure to be loaded in any manner that will endanger the structure, nor shall Contractor subject any part of the Work or adjacent property to stresses or pressures that will endanger it.

6.12 *Record Documents*

A. Contractor shall maintain in a safe place at the Site one record copy of all Drawings, Specifications, Addenda, Change Orders, Work Change Directives, Field Orders, and written interpretations and clarifications in good order and annotated to show changes made during construction. These record documents together with all approved Samples and a counterpart of all approved Shop Drawings will be available to Engineer for reference. Upon completion of the Work, these record documents, Samples, and Shop Drawings and other closeout submittals specified will be delivered to Engineer for Owner.

6.13 *Safety and Protection*

A. Contractor shall be solely responsible for initiating, maintaining and supervising all safety precautions and programs in connection with the Work. Such responsibility does not relieve Subcontractors of their responsibility for the safety of persons or property in the performance of their work, nor for compliance with applicable safety Laws and Regulations. Contractor shall take all necessary precautions for the safety of, and shall provide the necessary protection to prevent damage, injury or loss to:

Copyright © 2007 National Society of Professional Engineers for EJCDC. All rights reserved.
Revisions highlighted within the text have been prepared by Woodard & Curran on behalf Owner

1. all persons on the Site or who may be affected by the Work;

2. all the Work and materials and equipment to be incorporated therein, whether in storage on or off the Site; and

3. other property at the Site or adjacent thereto, including trees, shrubs, lawns, walks, pavements, roadways, structures, utilities, and Underground Facilities not designated for removal, relocation, or replacement in the course of construction.

B. Contractor shall comply with all applicable Laws and Regulations relating to the safety of persons or property, or to the protection of persons or property from damage, injury, or loss; and shall erect and maintain all necessary safeguards for such safety and protection. Contractor shall notify owners of adjacent property and of Underground Facilities and other utility owners when prosecution of the Work may affect them, and shall cooperate with them in the protection, removal, relocation, and replacement of their property.

C. Contractor shall comply with the applicable requirements of Owner's safety programs, if any. The Supplementary Conditions identify any Owner's safety programs (if any) and other safety requirements that are applicable to the Work.

D. Contractor shall inform Owner and Engineer of the specific requirements of Contractor's safety program with which Owner's and Engineer's employees and representatives must comply while at the Site.

E. All damage, injury, or loss to any property referred to in Paragraph 6.13.A.2 or 6.13.A.3 caused, directly or indirectly, in whole or in part, by Contractor, any Subcontractor, Supplier, or any other individual or entity directly or indirectly employed by any of them to perform any of the Work, or anyone for whose acts any of them may be liable, shall be remedied by Contractor (except damage or loss attributable to the fault of Drawings or Specifications or to the acts or omissions of Owner or Engineer or anyone employed by any of them, or anyone for whose acts any of them may be liable, and not attributable, directly or indirectly, in whole or in part, to the fault or negligence of Contractor or any Subcontractor, Supplier, or other individual or entity directly or indirectly employed by any of them).

F. Contractor's duties and responsibilities for safety and for protection of the Work shall continue until such time as all the Work is completed and Engineer has issued a notice to Owner and Contractor in accordance with Paragraph 14.07.B that the Work is acceptable (except as otherwise expressly provided in connection with Substantial Completion).

6.14 *Safety Representative*

A. Contractor shall designate a qualified and experienced safety representative at the Site whose duties and responsibilities shall be the prevention of accidents and the maintaining and supervising of safety precautions and programs.

Copyright © 2007 National Society of Professional Engineers for EJCDC. All rights reserved.
Revisions highlighted within the text have been prepared by Woodard & Curran on behalf Owner

6.15 *Hazard Communication Programs*

A. Contractor shall be responsible for coordinating any exchange of material safety data sheets or other hazard communication information required to be made available to or exchanged between or among employers at the Site in accordance with Laws or Regulations.

6.16 *Emergencies*

A. In emergencies affecting the safety or protection of persons or the Work or property at the Site or adjacent thereto, Contractor is obligated to act to prevent threatened damage, injury, or loss. Contractor shall give Engineer prompt written notice if Contractor believes that any significant changes in the Work or variations from the Contract Documents have been caused thereby or are required as a result thereof. If Engineer determines that a change in the Contract Documents is required because of the action taken by Contractor in response to such an emergency, a Work Change Directive or Change Order will be issued.

6.17 *Shop Drawings and Samples*

A. Contractor shall submit Shop Drawings and Samples to Engineer for review and approval in accordance with the accepted Schedule of Submittals (as required by Paragraph 2.07). Each submittal will be identified as Engineer may require.

1. Shop Drawings:

a. Submit number of copies specified in the General Requirements.

b. Data shown on the Shop Drawings will be complete with respect to quantities, dimensions, specified performance and design criteria, materials, and similar data to show Engineer the services, materials, and equipment Contractor proposes to provide and to enable Engineer to review the information for the limited purposes required by Paragraph 6.17.D.

2. Samples:

a. Submit number of Samples specified in the Specifications.

b. Clearly identify each Sample as to material, Supplier, pertinent data such as catalog numbers, the use for which intended and other data as Engineer may require to enable Engineer to review the submittal for the limited purposes required by Paragraph 6.17.D.

B. Where a Shop Drawing or Sample is required by the Contract Documents or the Schedule of Submittals, any related Work performed prior to Engineer's review and approval of the pertinent submittal will be at the sole expense and responsibility of Contractor.

Copyright © 2007 National Society of Professional Engineers for EJCDC. All rights reserved.
Revisions highlighted within the text have been prepared by Woodard & Curran on behalf Owner

C. Submittal Procedures:

1. Before submitting each Shop Drawing or Sample, Contractor shall have:

   a. reviewed and coordinated each Shop Drawing or Sample with other Shop Drawings and Samples and with the requirements of the Work and the Contract Documents;

   b. determined and verified all field measurements, quantities, dimensions, specified performance and design criteria, installation requirements, materials, catalog numbers, and similar information with respect thereto;

   c. determined and verified the suitability of all materials offered with respect to the indicated application, fabrication, shipping, handling, storage, assembly, and installation pertaining to the performance of the Work; and

   d. determined and verified all information relative to Contractor's responsibilities for means, methods, techniques, sequences, and procedures of construction, and safety precautions and programs incident thereto.

2. Each submittal shall bear a stamp or specific written certification that Contractor has satisfied Contractor's obligations under the Contract Documents with respect to Contractor's review and approval of that submittal.

3. With each submittal, Contractor shall give Engineer specific written notice of any variations that the Shop Drawing or Sample may have from the requirements of the Contract Documents. This notice shall be both a written communication separate from the Shop Drawings or Sample submittal; and, in addition, by a specific notation made on each Shop Drawing or Sample submitted to Engineer for review and approval of each such variation.

D. Engineer's Review:

1. Engineer will provide timely review of Shop Drawings and Samples in accordance with the Schedule of Submittals acceptable to Engineer. Engineer's review and approval will be only to determine if the items covered by the submittals will, after installation or incorporation in the Work, conform to the information given in the Contract Documents and be compatible with the design concept of the completed Project as a functioning whole as indicated by the Contract Documents.

2. Engineer's review and approval will not extend to means, methods, techniques, sequences, or procedures of construction (except where a particular means, method, technique, sequence, or procedure of construction is specifically and expressly called for by the Contract Documents) or to safety precautions or programs incident thereto. The review and approval of a separate item as such will not indicate approval of the assembly in which the item functions.

Copyright © 2007 National Society of Professional Engineers for EJCDC. All rights reserved.
Revisions highlighted within the text have been prepared by Woodard & Curran on behalf Owner

3. Engineer's review and approval shall not relieve Contractor from responsibility for any variation from the requirements of the Contract Documents unless Contractor has complied with the requirements of Paragraph 6.17.C.3 and Engineer has given written approval of each such variation by specific written notation thereof incorporated in or accompanying the Shop Drawing or Sample. Engineer's review and approval shall not relieve Contractor from responsibility for complying with the requirements of Paragraph 6.17.C.1. or for errors or omissions in a Shop Drawing or Sample.

E. Resubmittal Procedures:

1. Contractor shall make corrections required by Engineer and shall return the required number of corrected copies of Shop Drawings and submit, as required, new Samples for review and approval. Contractor shall direct specific attention in writing to revisions other than the corrections called for by Engineer on previous submittals.

2. Contractor shall furnish required submittals with sufficient information and accuracy in order to obtain required approval of an item with no more than 3 submittals. Engineer will record Engineer's time for reviewing subsequent submittals of Shop Drawings, samples, or other items requiring approval and Contractor shall reimburse Owner for Engineer's charges for such time.

3. In the event that Contractor requests a change of a previously approved item, Contractor shall reimburse Owner for Engineer's charges for its review time unless the need for such change is beyond the control of Contractor.

6.18 *Continuing the Work*

A. Contractor shall carry on the Work and adhere to the Progress Schedule during all disputes or disagreements with Owner. No Work shall be delayed or postponed pending resolution of any disputes or disagreements, except as permitted by Paragraph 15.04 or as Owner and Contractor may otherwise agree in writing.

6.19 *Contractor's General Warranty and Guarantee*

A. Contractor warrants and guarantees to Owner that all Work will be in accordance with the Contract Documents and in accordance with Subcontractor warranties, manufacturers and Suppliers warranties on equipment and material, and extended or special warranties and will not be defective for the correction period specified in 13.07. Owner and Engineer and ~~its~~ their officers, directors, members, partners, employees, agents, consultants, and subcontractors shall be entitled to rely on representation of Contractor's warranty and guarantee.

1. Contractor shall obtain and preserve for the benefit of the Owner:

a. manufacturers' and Suppliers' written warranties and guarantees on equipment and material incorporated into the Work;

b. written warranties and guarantees from each Subcontractor engaged in the performance of the Work; and

Copyright © 2007 National Society of Professional Engineers for EJCDC. All rights reserved.

2. extended or special warranties.

B. Contractor's warranty and guarantee hereunder excludes defects or damage caused by:

1. abuse, modification, or improper maintenance or operation by persons other than Contractor, Subcontractors, Suppliers, or any other individual or entity for whom Contractor is responsible; or

2. normal wear and tear under normal usage.

C. Contractor's obligation to perform and complete the Work in accordance with the Contract Documents shall be absolute. None of the following will constitute an acceptance of Work that is not in accordance with the Contract Documents or a release of Contractor's obligation to perform the Work in accordance with the Contract Documents:

1. observations by Engineer;

2. recommendation by Engineer or payment by Owner of any progress or final payment;

3. the issuance of a certificate of Substantial Completion by Engineer or any payment related thereto by Owner;

4. use or occupancy of the Work or any part thereof by Owner;

5. any review and approval of a Shop Drawing or Sample submittal or the issuance of a notice of acceptability by Engineer;

6. any inspection, test, or approval by others; ~~or~~

7. any correction of defective Work by Owner; or~~.~~

8. any acceptance by Owner or any failure to do so.

D. Contractor shall prepare and execute a written general warranty and guarantee applicable to the Work reflecting the provisions of this Paragraph 6.19, Article 13 and other applicable provisions of the Contract Documents pertaining to warranties and guarantees, Subcontractor, manufacturers and Supplier warranties and guarantees, and extended or special warranties and guarantees. Contractor shall submit this written general warranty and guarantee in accordance with Article 14 and the General Requirements.

E. Provision of any warranties or guarantees:

1. will not be effective to assign to Owner, or any of Owner's consultants, agents or employees, any duty or authority to supervise or direct the furnishing or performance of the Work or any duty or authority to undertake responsibility contrary to the provisions of Paragraph 8.09; and

Copyright © 2007 National Society of Professional Engineers for EJCDC. All rights reserved.
Revisions highlighted within the text have been prepared by Woodard & Curran on behalf Owner

2. will not be effective to assign to Engineer, or any of Engineer's consultants, agents or employees, any duty or authority to supervise or direct the furnishing or performance of the Work or any duty or authority to undertake responsibility contrary to the provisions of Paragraph 9.09.

F. The warranty and guarantee provisions of this Paragraph 6.19 shall be in addition to and not in limitation of any other warranties, guarantees or remedies allowed by Law or the Contract Documents.

6.20 *Indemnification*

A. To the fullest extent permitted by Laws and Regulations, Contractor shall indemnify, defend, and hold harmless Owner and Engineer, and the officers, directors, members, partners, employees, agents, consultants and subcontractors of each and any of them from and against all claims, costs, losses, and damages (including but not limited to all fees and charges of engineers, architects, attorneys, and other professionals and all court or arbitration or other dispute resolution costs) arising out of or relating to the performance of the Work, provided that any such claim, cost, loss, or damage is attributable to bodily injury, sickness, disease, or death, or to injury to or destruction of tangible property ~~(other than the Work itself)~~, including the loss of use resulting therefrom but only to the extent caused by any negligent or wrongful act or omission of Contractor, any Subcontractor, any Supplier, or any individual or entity directly or indirectly employed by any of them to perform any of the Work or anyone for whose acts any of them may be liable .

B. In any and all claims against Owner or Engineer or any of their officers, directors, members, partners, employees, agents, consultants, or subcontractors by any employee (or the survivor or personal representative of such employee) of Contractor, any Subcontractor, any Supplier, or any individual or entity directly or indirectly employed by any of them to perform any of the Work, or anyone for whose acts any of them may be liable, the indemnification obligation under Paragraph 6.20.A shall not be limited in any way by any limitation on the amount or type of damages, compensation, or benefits payable by or for Contractor or any such Subcontractor, Supplier, or other individual or entity under workers' compensation acts, disability benefit acts, or other employee benefit acts.

1. Without limiting the generality of the preceding Paragraph, the Contractor hereby specifically agrees to indemnify, defend, and hold harmless the Owner and Engineer from all such claims, losses or expenses which arise out of injuries of employees of the Contractor or any of its Subcontractors or Suppliers of any tier related to performance of the Work. It is the Owner intention that all financial risk of injuries related to the Work be borne by the Contractor, and that the Owner have no financial responsibility, direct or indirect, for any such claims.

Copyright © 2007 National Society of Professional Engineers for EJCDC. All rights reserved.
Revisions highlighted within the text have been prepared by Woodard & Curran on behalf Owner

C. The indemnification obligations of Contractor under Paragraph 6.20.A shall not extend to the liability of Engineer and Engineer's officers, directors, members, partners, employees, agents, consultants and subcontractors arising out of:

1. the preparation or approval of , or the failure to prepare or approve maps, Drawings, opinions, reports, surveys, Change Orders, designs, or Specifications, provided however, that if the claim, cost, loss or damage referred to in this Paragraph 6.20 results from failure of the Engineer to discover a condition, Underground Facilities or object which is underground or otherwise not reasonably observable by the Engineer, and if said failure to discover either was or should have been apparent to the Contractor in that the said condition or object is omitted from the Engineer's maps, Drawings, opinions, reports, surveys, Change Orders, designs or Specifications, then the Contractor shall be liable for indemnification of the Engineer and Owner under Paragraph 6.20 for claims, costs, losses and damages resulting from said failure to discover unless Contractor shall have notified Engineer of the existence and location of such condition or object prior to the occurrence of such claims, costs, losses and damages and in sufficient time for Engineer to have made provisions therefor; or

2. giving directions or instructions, or failing to give them, if that is the primary cause of the injury or damage.; or

3. caused by the negligent acts, errors or omissions of any of them.

6.21 *Delegation of Professional Design Services*

A. Contractor will not be required to provide professional design services unless such services are specifically required by the Contract Documents for a portion of the Work or unless such services are required to carry out Contractor's responsibilities for construction means, methods, techniques, sequences and procedures. Contractor shall not be required to provide professional services in violation of applicable law.

B. If professional design services or certifications by a design professional related to systems, materials or equipment are specifically required of Contractor by the Contract Documents, Owner and Engineer will specify all performance and design criteria that such services must satisfy. Contractor shall cause such services or certifications to be provided by a properly licensed professional, whose signature and seal shall appear on all drawings, calculations, specifications, certifications, Shop Drawings and other submittals prepared by such professional. Shop Drawings and other submittals related to the Work designed or certified by such professional, if prepared by others, shall bear such professional's written approval when submitted to Engineer.

C. Owner and Engineer shall be entitled to rely upon the adequacy, accuracy and completeness of the services, certifications or approvals performed by such design professionals, provided Owner and Engineer have specified to Contractor all performance and design criteria that such services must satisfy.

Copyright © 2007 National Society of Professional Engineers for EJCDC. All rights reserved.
Revisions highlighted within the text have been prepared by Woodard & Curran on behalf Owner

D. Pursuant to this Paragraph 6.21, Engineer's review and approval of design calculations and design drawings will be only for the limited purpose of checking for conformance with performance and design criteria given and the design concept expressed in the Contract Documents. Engineer's review and approval of Shop Drawings and other submittals (except design calculations and design drawings) will be only for the purpose stated in Paragraph 6.17.D.1.

E. Contractor shall not be responsible for the adequacy of the performance or design criteria required by the Contract Documents.

ARTICLE 7 – OTHER WORK AT THE SITE

7.01 *Related Work at Site*

A. Owner may perform other work related to the Project at the Site with Owner's employees, or through other direct contracts therefor, or have other work performed by utility owners. If such other work is not noted in the Contract Documents, then:

1. written notice thereof will be given to Contractor prior to starting any such other work; and

2. if Owner and Contractor are unable to agree on entitlement to or on the amount or extent, if any, of any adjustment in the Contract Price or Contract Times that should be allowed as a result of such other work, a Claim may be made therefor as provided in Paragraph 10.05.

B. Contractor shall afford each other contractor who is a party to such a direct contract, each utility owner, and Owner, if Owner is performing other work with Owner's employees, proper and safe access to the Site, provide a reasonable opportunity for the introduction and storage of materials and equipment and the execution of such other work, and properly coordinate the Work with theirs. Contractor shall do all cutting, fitting, and patching of the Work that may be required to properly connect or otherwise make its several parts come together and properly integrate with such other work. Contractor shall not endanger any work of others by cutting, excavating, or otherwise altering such work; provided, however, that Contractor may cut or alter others' work with the written consent of Engineer and the others whose work will be affected. ~~The duties and responsibilities of Contractor under this Paragraph are for the benefit of such utility owners and other contractors to the extent that there are comparable provisions for the benefit of Contractor in said direct contracts between Owner and such utility owners and other contractors.~~

C. If the proper execution or results of any part of Contractor's Work depends upon work performed by others under this Article 7, Contractor shall inspect such other work and promptly report to Engineer in writing any delays, defects, or deficiencies in such other work that render it unavailable or unsuitable for the proper execution and results of Contractor's Work. Contractor's failure to so report will constitute an acceptance of such other work as fit and proper for integration with Contractor's Work except for latent defects and deficiencies in such other work.

Copyright © 2007 National Society of Professional Engineers for EJCDC. All rights reserved.
Revisions highlighted within the text have been prepared by Woodard & Curran on behalf Owner

7.02 *Coordination*

A. If Owner intends to contract with others for the performance of other work on the Project at the Site, the following will be set forth in Supplementary Conditions:

1. the individual or entity who will have authority and responsibility for coordination of the activities among the various contractors will be identified;

2. the specific matters to be covered by such authority and responsibility will be itemized; and

3. the extent of such authority and responsibilities will be provided.

B. Unless otherwise provided in the Supplementary Conditions, Owner shall have sole authority and responsibility for such coordination.

7.03 *Legal Relationships*

A. Paragraphs 7.01.A and 7.02 are not applicable for utilities not under the control of Owner.

B. Each other direct contract of Owner under Paragraph 7.01.A shall provide that the other contractor is liable to Owner and Contractor for the reasonable direct delay and disruption costs incurred by Contractor as a result of the other contractor's wrongful actions or inactions.

C. Contractor shall be liable to Owner and any other contractor under direct contract to Owner for the reasonable direct delay and disruption costs incurred by such other contractor as a result of Contractor's wrongful action or inactions.

ARTICLE 8 – OWNER'S RESPONSIBILITIES

8.01 *Communications to Contractor*

A. Except as otherwise provided in these General Conditions, Owner shall issue all communications to Contractor through Engineer.

8.02 *Replacement of Engineer*

A. In case of termination of the employment of Engineer, Owner shall appoint an engineer ~~to whom Contractor makes no reasonable objection,~~ whose status under the Contract Documents shall be that of the former Engineer.

8.03 *Furnish Data*

A. Owner shall promptly furnish the data required of Owner under the Contract Documents.

8.04 *Pay When Due*

A. Owner shall make payments to Contractor when they are due as provided in Paragraphs 14.02.C and 14.07.C.

Copyright © 2007 National Society of Professional Engineers for EJCDC. All rights reserved.
Revisions highlighted within the text have been prepared by Woodard & Curran on behalf Owner

8.05 *Lands and Easements; Reports and Tests*

A. Owner's duties with respect to providing lands and easements and providing engineering surveys to establish reference points are set forth in Paragraphs 4.01 and 4.05. Paragraph 4.02 refers to Owner's identifying and making available to Contractor copies of reports of explorations and tests of subsurface conditions and drawings of physical conditions relating to existing surface or subsurface structures at the Site.

8.06 *Insurance*

A. Owner's responsibilities, if any, with respect to purchasing and maintaining liability and property insurance are set forth in Article 5.

8.07 *Change Orders*

A. Owner ~~is obligated to~~ may execute Change Orders as indicated in Paragraph 10.03.

8.08 *Inspections, Tests, and Approvals*

A. Owner's responsibility with respect to certain inspections, tests, and approvals is set forth in Paragraph 13.03.B.

8.09 *Limitations on Owner's Responsibilities*

A. The Owner shall not supervise, direct, or have control or authority over, nor be responsible for, Contractor's means, methods, techniques, sequences, or procedures of construction, or the safety precautions and programs incident thereto, or for any failure of Contractor to comply with Laws and Regulations applicable to the performance of the Work. However, the Owner shall have the right to direct the Contractor to perform the Work according to any sequence schedule set forth in the Contract Documents or established pursuant thereto. Owner will not be responsible for Contractor's failure to perform the Work in accordance with the Contract Documents.

8.10 *Undisclosed Hazardous Environmental Condition*

A. Owner's responsibility in respect to an undisclosed Hazardous Environmental Condition is set forth in Paragraph 4.06.

8.11 *Evidence of Financial Arrangements*

A. Upon request of Contractor, Owner shall furnish Contractor reasonable evidence that financial arrangements have been made to satisfy Owner's obligations under the Contract Documents.

8.12 *Compliance with Safety Program*

A. While at the Site, Owner's employees and representatives shall comply with the specific applicable requirements of Contractor's safety programs of which Owner has been informed pursuant to Paragraph 6.13.D.

Copyright © 2007 National Society of Professional Engineers for EJCDC. All rights reserved.
Revisions highlighted within the text have been prepared by Woodard & Curran on behalf Owner

ARTICLE 9 – ENGINEER'S STATUS DURING CONSTRUCTION

9.01 *Owner's Representative*

A. Engineer will be Owner's representative during the construction period. The duties and responsibilities and the limitations of authority of Engineer as Owner's representative during construction are set forth in the Contract Documents.

9.02 *Visits to Site*

A. Engineer will make visits to the Site at intervals appropriate to the various stages of construction as Engineer deems necessary in order to observe as an experienced and qualified design professional the progress that has been made and the quality of the various aspects of Contractor's executed Work. Based on information obtained during such visits and observations, Engineer, for the benefit of Owner, will determine, in general, if the Work is proceeding in accordance with the Contract Documents. Engineer will not be required to make exhaustive or continuous inspections on the Site to check the quality or quantity of the Work. Engineer's efforts will be directed toward providing for Owner a greater degree of confidence that the completed Work will conform generally to the Contract Documents. On the basis of such visits and observations, Engineer will keep Owner informed of the progress of the Work and will endeavor to guard Owner against defective Work.

B. Engineer's visits and observations are subject to all the limitations on Engineer's authority and responsibility set forth in Paragraph 9.09. Particularly, but without limitation, during or as a result of Engineer's visits or observations of Contractor's Work, Engineer will not supervise, direct, control, or have authority over or be responsible for Contractor's means, methods, techniques, sequences, or procedures of construction, or the safety precautions and programs incident thereto, or for any failure of Contractor to comply with Laws and Regulations applicable to the performance of the Work. However, the Engineer shall have the right to direct the Contractor to perform the Work according to any sequence schedule set forth in the Contract Documents or established pursuant thereto.

9.03 *Project Representative*

A. If Owner and Engineer agree, Engineer will furnish a Resident Project Representative to assist Engineer in providing more extensive observation of the Work. The authority and responsibilities of any such Resident Project Representative and assistants will be as provided ~~in the Supplementary Conditions~~herein, and limitations on the responsibilities thereof will be as provided in Paragraph 9.09. If Owner designates another representative or agent to represent Owner at the Site who is not Engineer's consultant, agent or employee, the responsibilities and authority and limitations thereon of such other individual or entity will be as provided in the Supplementary Conditions.

B. The Resident Project Representative (RPR) will be Engineer's employee or agent at the Site, will act as directed by and under the supervision of Engineer, and will confer with Engineer regarding RPR's actions. RPR's dealings in matters pertaining to the Work in general shall be with Engineer and Contractor. RPR's dealings with Subcontractors shall be through or with the full knowledge and approval of Contractor. The RPR shall:

Copyright © 2007 National Society of Professional Engineers for EJCDC. All rights reserved.
Revisions highlighted within the text have been prepared by Woodard & Curran on behalf Owner

1. *Schedules:* Review the Progress Schedule, schedule of Shop Drawing and Samples submittals, and Schedule of Values prepared by Contractor and consult with Engineer concerning acceptability.

2. *Conferences and Meetings:* Attend meetings with Contractor, such as preconstruction conferences, progress meetings, job conferences and other Project-related meetings, and prepare and circulate copies of minutes thereof.

3. Liaison:

   a. Serve as Engineer's liaison with Contractor, working principally through Contractor's authorized representative, to assist in providing information regarding the intent of the Contract Documents.

   b. Assist Engineer in serving as Owner's liaison with Contractor when Contractor's operations affect Owner's on-Site operations.

   c. Assist in obtaining from Owner additional details or information, when required for proper execution of the Work.

4. *Interpretation of Contract Documents:* Report to Engineer when clarifications and interpretations of the Contract Documents are needed and transmit to Contractor clarifications and interpretations as issued by Engineer.

5. Shop Drawings and Samples:

   a. Record date of receipt of Samples and approved Shop Drawings.

   b. Receive Samples which are furnished at the Site by Contractor, and notify Engineer of availability of Samples for examination.

6. Modifications:

   a. Consider and evaluate Contractor's suggestions for modifications in Drawings or Specifications and report such suggestions, together with RPR's recommendations, to Engineer.

   b. Transmit to Contractor in writing, decisions as issued by Engineer.

7. Review of Work and Rejection of Defective Work:

   a. Conduct on-Site observations of Contractor's Work in progress to assist Engineer in determining if the Work is in general proceeding in accordance with the Contract Documents.

   b. Report to Engineer whenever RPR believes that any part of Contractor's Work in progress will not produce a completed Project that conforms generally to the Contract Documents or will imperil the integrity of the design concept of the completed Project as a functioning whole as indicated in the Contract Documents, or has been damaged,

Copyright © 2007 National Society of Professional Engineers for EJCDC. All rights reserved.
Revisions highlighted within the text have been prepared by Woodard & Curran on behalf Owner

or does not meet the requirements of any inspection, test or approval required to be made; and advise Engineer of that part of Work in progress that RPR believes should be corrected or rejected or should be uncovered for observation, or requires special testing, inspection or approval.

8. Inspections, Tests, and System Startups:

   a. Verify that tests, equipment, and systems start-ups and operating and maintenance training are conducted in the presence of appropriate Owner's personnel, and that Contractor maintains adequate records thereof.

   b. Observe, record, and report to Engineer appropriate details relative to the test procedures and systems start-ups.

9. Records:

   a. Record names, addresses, fax numbers, e-mail addresses, web site locations, and telephone numbers of Contractor, Subcontractors, and major Suppliers.

   b. Maintain records for use in preparing Project documentation.

10. Reports:

   a. Furnish periodic reports to Engineer as required of progress of the Work and of Contractor's compliance with the Progress Schedule and schedule of Shop Drawing and Sample submittals.

   b. Draft and recommend to Engineer proposed Change Orders, Work Change Directives, and Field Orders. Obtain backup material from Contractor.

   c. Immediately notify Engineer of the occurrence of any Site accidents, emergencies, acts of God endangering the Work, damage to property by fire or other causes, or the discovery of any Hazardous Environmental Condition or conditions that may impede the compliant operation of existing facilities on Site.

11. *Payment Requests:* Review Applications for Payment with Contractor for compliance with the established procedure for their submission and forward with recommendations to Engineer, noting particularly the relationship of the payment requested to the Schedule of Values, Work completed, and materials and equipment delivered at the Site but not incorporated in the Work.

12. *Certificates, Operation and Maintenance Manuals:* During the course of the Work, verify that materials and equipment certificates, operation and maintenance manuals and other data required by the Specifications to be assembled and furnished by Contractor are applicable to the items actually installed and in accordance with the Contract Documents, and have these documents delivered to Engineer for review and forwarding to Owner prior to payment for that part of the Work.

Copyright © 2007 National Society of Professional Engineers for EJCDC. All rights reserved.
Revisions highlighted within the text have been prepared by Woodard & Curran on behalf Owner

13. Completion:

a. Participate in a Substantial Completion inspection, assist in the determination of Substantial Completion and the preparation of the Punch List (lists of items to be completed or corrected).

b. Participate in a final inspection in the company of Engineer, Owner, and Contractor and prepare a final Punch List (list of items to be completed and deficiencies to be remedied).

c. Observe whether all items on the final Punch List have been completed or corrected and make recommendations to Engineer concerning acceptance and issuance of the Notice of Acceptability of the Work.

C. The RPR shall not:

1. Authorize any deviation from the Contract Documents or substitution of materials or equipment, including "or-equal" items.

2. Exceed limitations of Engineer's authority as set forth in the Contract Documents.

3. Undertake any of the responsibilities of Contractor, Subcontractors, Suppliers, or Contractor's superintendent.

4. Advise on, issue directions relative to, or assume control over any aspect of the means, methods, techniques, sequences or procedures of Contractor's Work unless such advice or directions are specifically required by the Contract Documents.

5. Advise on, issue directions regarding, or assume control over safety practices, precautions, and programs in connection with the activities or operations of Owner or Contractor.

6. Participate in specialized field or laboratory tests or inspections conducted off-Site by others except as specifically authorized by Engineer.

7. Accept Shop Drawing or Sample submittals from anyone other than Contractor.

8. Authorize Owner to occupy the Project in whole or in part or determine operational protocol that may affect the compliant operation of existing facilities.

9.04 *Authorized Variations in Work*

A. Engineer may authorize minor variations in the Work from the requirements of the Contract Documents which do not involve an adjustment in the Contract Price or the Contract Times and are compatible with the design concept of the completed Project as a functioning whole as indicated by the Contract Documents. These may be accomplished by a Field Order and will be binding on Owner and also on Contractor, who shall perform the Work involved promptly. If Owner or Contractor believes that a Field Order justifies an adjustment in the Contract Price or Contract Times, or both, and the parties are unable to agree on entitlement to or on the amount or extent, if any, of any such adjustment, a Claim may be made therefor as provided in Paragraph 10.05.

Copyright © 2007 National Society of Professional Engineers for EJCDC. All rights reserved.

9.05 *Rejecting Defective Work*

A. Engineer will have authority to reject Work which Engineer believes to be defective, or that Engineer believes will not produce a completed Project that conforms to the Contract Documents or that will prejudice the integrity of the design concept of the completed Project as a functioning whole as indicated by the Contract Documents. Engineer will also have authority to require special inspection or testing of the Work as provided in Paragraph 13.04, whether or not the Work is fabricated, installed, or completed.

9.06 *Shop Drawings, Change Orders and Payments*

A. In connection with Engineer's authority, and limitations thereof, as to Shop Drawings and Samples, see Paragraph 6.17.

B. In connection with Engineer's authority, and limitations thereof, as to design calculations and design drawings submitted in response to a delegation of professional design services, if any, see Paragraph 6.21.

C. In connection with Engineer's authority as to Change Orders, see Articles 10, 11, and 12.

D. In connection with Engineer's authority as to Applications for Payment, see Article 14.

9.07 *Determinations for Unit Price Work*

A. Engineer will determine the actual quantities and classifications of Unit Price Work performed by Contractor. Engineer will review with Contractor the Engineer's preliminary determinations on such matters before rendering a written decision thereon (by recommendation of an Application for Payment or otherwise). Engineer's written decision thereon will be final and binding (except as modified by Engineer to reflect changed factual conditions or more accurate data) upon Owner and Contractor, subject to the provisions of Paragraph 10.05.

9.08 *Decisions on Requirements of Contract Documents and Acceptability of Work*

A. Engineer will be the initial interpreter of the requirements of the Contract Documents and judge of the acceptability of the Work thereunder. All matters in question and other matters between Owner and Contractor arising prior to the date final payment is due relating to the acceptability of the Work, and the interpretation of the requirements of the Contract Documents pertaining to the performance of the Work, will be referred initially to Engineer in writing within 30 days of the event giving rise to the question.

B. Engineer will, with reasonable promptness, render a written decision on the issue referred. If Owner or Contractor believes that any such decision entitles them to an adjustment in the Contract Price or Contract Times or both, a Claim may be made under Paragraph 10.05. The date of Engineer's decision shall be the date of the event giving rise to the issues referenced for the purposes of Paragraph 10.05.B.

C. Engineer's written decision on the issue referred will be final and binding on Owner and Contractor, subject to the provisions of Paragraph 10.05.

Copyright © 2007 National Society of Professional Engineers for EJCDC. All rights reserved.
Revisions highlighted within the text have been prepared by Woodard & Curran on behalf Owner

D. When functioning as interpreter and judge under this Paragraph 9.08, Engineer will not show partiality to Owner or Contractor and will not be liable in connection with any interpretation or decision rendered in good faith in such capacity.

9.09 *Limitations on Engineer's Authority and Responsibilities*

A. Neither Engineer's authority or responsibility under this Article 9 or under any other provision of the Contract Documents nor any decision made by Engineer in good faith either to exercise or not exercise such authority or responsibility or the undertaking, exercise, or performance of any authority or responsibility by Engineer shall create, impose, or give rise to any duty in contract, tort, or otherwise owed by Engineer to Contractor, any Subcontractor, any Supplier, any other individual or entity, or to any surety for or employee or agent of any of them.

B. Engineer will not supervise, direct, control, or have authority over or be responsible for Contractor's means, methods, techniques, sequences, or procedures of construction, or the safety precautions and programs incident thereto, or for any failure of Contractor to comply with Laws and Regulations applicable to the performance of the Work. However, the Engineer shall have the right to direct the Contractor to perform the Work according to any sequence schedule set forth in the Contract Documents or established pursuant thereto. Engineer will not be responsible for Contractor's failure to perform the Work in accordance with the Contract Documents.

C. Engineer will not be responsible for the acts or omissions of Contractor or of any Subcontractor, any Supplier, or of any other individual or entity performing any of the Work.

D. Engineer's review of the final Application for Payment and accompanying documentation and all maintenance and operating instructions, schedules, guarantees, bonds, certificates of inspection, tests and approvals, and other documentation required to be delivered by Paragraph 14.07.A will only be to determine generally that their content complies with the requirements of, and in the case of certificates of inspections, tests, and approvals that the results certified indicate compliance with, the Contract Documents.

E. The limitations upon authority and responsibility set forth in this Paragraph 9.09 shall also apply to the Resident Project Representative, if any, and assistants, if any.

F. Engineer will have no responsibility or authority:

1. To order changes in construction which will result in additional costs or which will require extensions of Contract Times;

2. To suspend all or any portion of Contractor's operations;

3. To terminate all or any portion of the Work;

4. To make final acceptance of all or any portion of the Work; and

5. To operate or maintain any portion of the Work.

Copyright © 2007 National Society of Professional Engineers for EJCDC. All rights reserved.

9.10 *Compliance with Safety Program*

A. While at the Site, Engineer's employees and representatives shall comply with the specific applicable requirements of Contractor's safety programs of which Engineer has been informed pursuant to Paragraph 6.13.D.

ARTICLE 10 – CHANGES IN THE WORK; CLAIMS

10.01 *Authorized Changes in the Work*

A. Without invalidating the Contract and without notice to any surety, Owner may, at any time or from time to time, order additions, deletions, or revisions in the Work by a Change Order, or a Work Change Directive. Upon receipt of any such document, Contractor shall promptly proceed with the Work involved which will be performed under the applicable conditions of the Contract Documents (except as otherwise specifically provided).

B. If Owner and Contractor are unable to agree on entitlement to, or on the amount or extent, if any, of an adjustment in the Contract Price or Contract Times, or both, that should be allowed as a result of a Work Change Directive, a Claim may be made therefor as provided in Paragraph 10.05.

10.02 *Unauthorized Changes in the Work*

A. Contractor shall not be entitled to an increase in the Contract Price or an extension of the Contract Times with respect to any work performed that is not required by the Contract Documents as amended, modified, or supplemented as provided in Paragraph 3.04, except in the case of an emergency as provided in Paragraph 6.16 or in the case of uncovering Work as provided in Paragraph 13.04.D.

10.03 *Execution of Change Orders*

A. Owner and Contractor shall execute appropriate Change Orders recommended by Engineer covering:

1. changes in the Work which are: (i) ordered by Owner pursuant to Paragraph 10.01.A, (ii) required because of acceptance of defective Work under Paragraph 13.08.A or Owner's correction of defective Work under Paragraph 13.09, or (iii) agreed to by the parties;

2. changes in the Contract Price or Contract Times which are agreed to by the parties, including any undisputed sum or amount of time for Work actually performed in accordance with a Work Change Directive; and

3. changes in the Contract Price or Contract Times which embody the substance of any written decision rendered by Engineer pursuant to Paragraph 10.05; provided that, in lieu of executing any such Change Order, an appeal may be taken from any such decision in accordance with the provisions of the Contract Documents and applicable Laws and Regulations, but during any such appeal, Contractor shall carry on the Work and adhere to the Progress Schedule as provided in Paragraph 6.18.A.

Copyright © 2007 National Society of Professional Engineers for EJCDC. All rights reserved.
Revisions highlighted within the text have been prepared by Woodard & Curran on behalf Owner

10.04 *Notification to Surety*

A. If the provisions of any bond require notice to be given to a surety of any change affecting the general scope of the Work or the provisions of the Contract Documents (including, but not limited to, Contract Price or Contract Times), the giving of any such notice will be Contractor's responsibility. The amount of each applicable bond will be adjusted to reflect the effect of any such change.

10.05 *Claims*

A. *Engineer's Decision Required*: All Claims, except those waived pursuant to Paragraph 14.09, shall be referred to the Engineer for decision. A decision by Engineer shall be required as a condition precedent to any exercise by Owner or Contractor of any rights or remedies either may otherwise have under the Contract Documents or by Laws and Regulations in respect of such Claims.

B. *Notice:* Written notice stating the general nature of each Claim shall be delivered by the claimant to Engineer and the other party to the Contract promptly (but in no event later than ~~30~~ 14 days) after the start of the event giving rise thereto. Failure to comply with this notice requirement shall constitute a waiver of the Claim. The responsibility to substantiate a Claim shall rest with the party making the Claim. Notice of the amount or extent of the Claim, with supporting data shall be delivered to the Engineer and the other party to the Contract within ~~60~~ 30 days after the start of such event (unless Engineer allows additional time for claimant to submit additional or more accurate data in support of such Claim). A Claim for an adjustment in Contract Price shall be prepared in accordance with the provisions of Paragraph 12.01.B. A Claim for an adjustment in Contract Times shall be prepared in accordance with the provisions of Paragraph 12.02.B. Each Claim shall be accompanied by claimant's written statement that the adjustment claimed is the entire adjustment to which the claimant believes it is entitled as a result of said event. The opposing party shall submit any response to Engineer and the claimant within 30 days after receipt of the claimant's last submittal (unless Engineer allows additional time).

C. *Engineer's Action*: Engineer will review each Claim and, within 30 days after receipt of the last submittal of the claimant or the last submittal of the opposing party, if any, take one of the following actions in writing:

1. deny the Claim in whole or in part;

2. approve the Claim; or

3. notify the parties that the Engineer is unable to resolve the Claim if, in the Engineer's sole discretion, it would be inappropriate for the Engineer to do so. For purposes of further resolution of the Claim, such notice shall be deemed a denial.

D. In the event that Engineer does not take action on a Claim within said 30 days, the Claim shall be deemed denied.

Copyright © 2007 National Society of Professional Engineers for EJCDC. All rights reserved.
Revisions highlighted within the text have been prepared by Woodard & Curran on behalf Owner

E. Engineer's written action under Paragraph 10.05.C or denial pursuant to Paragraphs 10.05.C.3 or 10.05.D will be final and binding upon Owner and Contractor, unless Owner or Contractor invoke the dispute resolution procedure set forth in Article 16 within 30 days of such action or denial.

F. No Claim for an adjustment in Contract Price or Contract Times will be valid if not submitted in accordance with this Paragraph 10.05.

G. Contractor shall not have the right to stop performance of the Work pending resolution of a Claim.

ARTICLE 11 – COST OF THE WORK; ALLOWANCES; UNIT PRICE WORK

11.01 *Cost of the Work*

A. *Costs Included:* The term Cost of the Work means the sum of all costs, except those excluded in Paragraph 11.01.B, necessarily incurred and paid by Contractor in the proper performance of the Work. When the value of any Work covered by a Change Order or when a Claim for an adjustment in Contract Price is determined on the basis of Cost of the Work, the costs to be reimbursed to Contractor will be only those additional or incremental costs required because of the change in the Work or because of the event giving rise to the Claim. Except as otherwise may be agreed to in writing by Owner, such costs shall be in amounts no higher than those prevailing in the locality of the Project, shall not include any of the costs itemized in Paragraph 11.01.B, and shall include only the following items:

1. Payroll costs for employees in the direct employ of Contractor in the performance of the Work under schedules of job classifications agreed upon by Owner and Contractor. Such employees shall include, without limitation, superintendents, foremen, and other personnel employed full time on the Work. Payroll costs for employees not employed full time on the Work shall be apportioned on the basis of their time spent on the Work. Payroll costs shall include, but not be limited to, salaries and wages plus the cost of fringe benefits, which shall include social security contributions, unemployment, excise, and payroll taxes, workers' compensation, health and retirement benefits, bonuses, sick leave, vacation and holiday pay applicable thereto. The expenses of performing Work outside of regular working hours, on Saturday, Sunday, or legal holidays, shall be included in the above to the extent authorized by Owner.

2. Cost of all materials and equipment furnished and incorporated in the Work, including costs of transportation and storage thereof, and Suppliers' field services required in connection therewith. All cash discounts shall accrue to Contractor unless Owner deposits funds with Contractor with which to make payments, in which case the cash discounts shall accrue to Owner. All trade discounts, rebates and refunds and returns from sale of surplus materials and equipment shall accrue to Owner, and Contractor shall make provisions so that they may be obtained.

3. Payments made by Contractor to Subcontractors for Work performed by Subcontractors. If required by Owner, Contractor shall obtain competitive bids from subcontractors acceptable to Owner and Contractor and shall deliver such bids to Owner, who will then determine, with the advice of Engineer, which bids, if any, will be acceptable. If any subcontract provides that the Subcontractor is to be paid on the basis of Cost of the Work plus a fee, the

Copyright © 2007 National Society of Professional Engineers for EJCDC. All rights reserved.

Subcontractor's Cost of the Work and fee shall be determined in the same manner as Contractor's Cost of the Work and fee as provided in this Paragraph 11.01.

4. Costs of special consultants (including but not limited to engineers, architects, testing laboratories, surveyors, attorneys, and accountants) employed for services specifically related to the Work.

5. Supplemental costs including the following:

   a. The proportion of necessary transportation, travel, and subsistence expenses of Contractor's employees incurred in discharge of duties connected with the Work.

   b. Cost, including transportation and maintenance, of all materials, supplies, equipment, machinery, appliances, office, and temporary facilities at the Site, and hand tools not owned by the workers, which are consumed in the performance of the Work, and cost, less market value, of such items used but not consumed which remain the property of Contractor.

   c. Rentals of all construction equipment and machinery, and the parts thereof whether rented from Contractor or others in accordance with rental agreements approved by Owner with the advice of Engineer, and the costs of transportation, loading, unloading, assembly, dismantling, and removal thereof. All such costs shall be in accordance with the terms of said rental agreements. The rental of any such equipment, machinery, or parts shall cease when the use thereof is no longer necessary for the Work.

      1) Rentals of construction equipment and machinery and the parts thereof whether rented from Contractor or others in accordance with rates published in current edition of the Rental Rate Blue Book® for construction equipment published by EquipmentWatch® (www.equipmentwatch.com). When Contractor-owned equipment is ordered by Owner or Engineer to be held at standby, equipment rental rates shall be 50% of normal rate. Rental or standby shall not include time that equipment is inoperative because of malfunction or breakdown and shall cease when the use thereof is no longer necessary for the Work.

   d. Sales, consumer, use, and other similar taxes related to the Work, and for which Contractor is liable, as imposed by Laws and Regulations.

   e. Deposits lost for causes other than negligence of Contractor, any Subcontractor, or anyone directly or indirectly employed by any of them or for whose acts any of them may be liable, and royalty payments and fees for permits and licenses.

   f. Losses and damages (and related expenses) caused by damage to the Work, not compensated by insurance or otherwise, sustained by Contractor in connection with the performance of the Work (except losses and damages within the deductible amounts of property insurance established in accordance with Paragraph 5.06.D), provided such losses and damages have resulted from causes other than the negligence of Contractor, any Subcontractor, or anyone directly or indirectly employed by any of them or for whose acts any of them may be liable. Such losses shall include settlements made with

Copyright © 2007 National Society of Professional Engineers for EJCDC. All rights reserved.
Revisions highlighted within the text have been prepared by Woodard & Curran on behalf Owner

the written consent and approval of Owner. No such losses, damages, and expenses shall be included in the Cost of the Work for the purpose of determining Contractor's fee.

g. The cost of utilities, fuel, and sanitary facilities at the Site.

h. Minor expenses such as telegrams, long distance telephone calls, telephone service at the Site, express and courier services, and similar petty cash items in connection with the Work.

i. The costs of premiums for all bonds and insurance Contractor is required by the Contract Documents to purchase and maintain.

B. *Costs Excluded:* The term Cost of the Work shall not include any of the following items:

1. Payroll costs and other compensation of Contractor's officers, executives, principals (of partnerships and sole proprietorships), general managers, safety managers, engineers, architects, estimators, attorneys, auditors, accountants, purchasing and contracting agents, expediters, timekeepers, clerks, and other personnel employed by Contractor, whether at the Site or in Contractor's principal or branch office for general administration of the Work and not specifically included in the agreed upon schedule of job classifications referred to in Paragraph 11.01.A.1 or specifically covered by Paragraph 11.01.A.4, all of which are to be considered administrative costs covered by the Contractor's fee.

2. Expenses of Contractor's principal and branch offices other than Contractor's office at the Site.

3. Any part of Contractor's capital expenses, including interest on Contractor's capital employed for the Work and charges against Contractor for delinquent payments.

4. Costs due to the negligence of Contractor, any Subcontractor, or anyone directly or indirectly employed by any of them or for whose acts any of them may be liable, including but not limited to, the correction of defective Work, disposal of materials or equipment wrongly supplied, and making good any damage to property.

5. Other overhead or general expense costs of any kind and the costs of any item not specifically and expressly included in Paragraphs 11.01.A.

C. *Contractor's Fee:* When all the Work is performed on the basis of cost-plus, Contractor's fee shall be determined as set forth in the Agreement. When the value of any Work covered by a Change Order or when a Claim for an adjustment in Contract Price is determined on the basis of Cost of the Work, Contractor's fee shall be determined as set forth in Paragraph 12.01.C.

D. *Documentation:* Whenever the Cost of the Work for any purpose is to be determined pursuant to Paragraphs 11.01.A and 11.01.B, Contractor will establish and maintain records thereof in accordance with generally accepted accounting practices and submit in a form acceptable to Engineer an itemized cost breakdown together with supporting data.

Copyright © 2007 National Society of Professional Engineers for EJCDC. All rights reserved.
Revisions highlighted within the text have been prepared by Woodard & Curran on behalf Owner

11.02 *Allowances*

A. It is understood that Contractor has included in the Contract Price all allowances so named in the Contract Documents and shall cause the Work so covered to be performed for such sums and by such persons or entities as may be acceptable to Owner and Engineer.

B. Cash Allowances: (Not used)

~~0. Contractor agrees that:~~

~~. the cash allowances include the cost to Contractor (less any applicable trade discounts) of materials and equipment required by the allowances to be delivered at the Site, and all applicable taxes; and~~

~~. Contractor's costs for unloading and handling on the Site, labor, installation, overhead, profit, and other expenses contemplated for the cash allowances have been included in the Contract Price and not in the allowances, and no demand for additional payment on account of any of the foregoing will be valid.~~

~~F.~~C. Owner's Contingency Allowances:

1. Contractor agrees that any Owner's ~~a~~ contingency allowance, if any, is for the sole use of Owner to cover ~~un~~estimated anticipated costs for certain items.

~~G.~~D. Prior to final payment, an appropriate Change Order will be issued as recommended by Engineer to reflect actual amounts due Contractor on account of Work covered by Owner's contingency allowances, and the Contract Price shall be correspondingly adjusted. Contractor shall not receive payment for any unused portion of the contingency allowance.

11.03 *Unit Price Work*

A. Where the Contract Documents provide that all or part of the Work is to be Unit Price Work, initially the Contract Price will be deemed to include for all Unit Price Work an amount equal to the sum of the unit price for each separately identified item of Unit Price Work times the estimated quantity of each item as indicated in the Agreement.

B. The estimated quantities of items of Unit Price Work are not guaranteed and are solely for the purpose of comparison of Bids and determining an initial Contract Price. Determinations of the actual quantities and classifications of Unit Price Work performed by Contractor will be made by Engineer subject to the provisions of Paragraph 9.07.

C. Each unit price will be deemed to include an amount considered by Contractor to be adequate to cover Contractor's overhead and profit for each separately identified item.

~~C. Owner or Contractor may make a Claim for an adjustment in the Contract Price in accordance with Paragraph 10.05 if:~~

~~0. the quantity of any item of Unit Price Work performed by Contractor differs materially and significantly from the estimated quantity of such item indicated in the Agreement; and~~

Copyright © 2007 National Society of Professional Engineers for EJCDC. All rights reserved.
Revisions highlighted within the text have been prepared by Woodard & Curran on behalf Owner

~~1. there is no corresponding adjustment with respect to any other item of Work; and~~

~~Contractor believes that Contractor is entitled to an increase in Contract Price as a result of having incurred additional expense or Owner believes that Owner is entitled to a decrease in Contract Price and the parties are unable to agree as to the amount of any such increase or decrease.~~

ARTICLE 12 – CHANGE OF CONTRACT PRICE; CHANGE OF CONTRACT TIMES

12.01 *Change of Contract Price*

A. The Contract Price may only be changed by a Change Order. Any Claim for an adjustment in the Contract Price shall be based on written notice submitted by the party making the Claim to the Engineer and the other party to the Contract in accordance with the provisions of Paragraph 10.05.

B. The value of any Work covered by a Change Order or of any Claim for an adjustment in the Contract Price will be determined as follows:

1. where the Work involved is covered by unit prices contained in the Contract Documents, by application of such unit prices to the quantities of the items involved (subject to the provisions of Paragraph 11.03); or

2. where the Work involved is not covered by unit prices contained in the Contract Documents, by a mutually agreed lump sum (which may include an allowance for overhead and profit not necessarily in accordance with Paragraph 12.01.C.2); or

3. where the Work involved is not covered by unit prices contained in the Contract Documents and agreement to a lump sum is not reached under Paragraph 12.01.B.2, on the basis of the Cost of the Work (determined as provided in Paragraph 11.01) plus a Contractor's fee for overhead and profit (determined as provided in Paragraph 12.01.C).

C. *Contractor's Fee:* The Contractor's fee for overhead and profit shall be determined as follows:

1. a mutually acceptable fixed fee; or

2. if a fixed fee is not agreed upon, then a fee based on the following percentages of the various portions of the Cost of the Work:

a. for costs incurred under Paragraphs 11.01.A.1 and 11.01.A.2, the Contractor's fee shall be ~~15~~ 10 percent;

b. for costs incurred under Paragraph 11.01.A.3, the Contractor's fee shall be five percent;

c. where one or more tiers of subcontracts are on the basis of Cost of the Work plus a fee and no fixed fee is agreed upon, the intent of Paragraphs 12.01.C.2.a and 12.01.C.2.b is that the Subcontractor who actually performs the Work, at whatever tier, will be paid a fee of ~~15~~ 10 percent of the costs incurred by such Subcontractor under Paragraphs 11.01.A.1 and 11.01.A.2 and that any higher tier Subcontractor and Contractor will each

Copyright © 2007 National Society of Professional Engineers for EJCDC. All rights reserved.

be paid a fee of five percent of the amount paid to the next lower tier Subcontractor, provided, however, that on any subcontracted work the total maximum fee to be paid by Owner under this subparagraph shall be no greater than 27 percent of the costs incurred by the Subcontractor who actually performs the Work;

d. no fee shall be payable on the basis of costs itemized under Paragraphs 11.01.A.4, 11.01.A.5, and 11.01.B;

e. the amount of credit to be allowed by Contractor to Owner for any change which results in a net decrease in cost will be the amount of the actual net decrease in cost plus a deduction in Contractor's fee by an amount equal to five percent of such net decrease; and

f. when both additions and credits are involved in any one change, the adjustment in Contractor's fee shall be computed on the basis of the net change in accordance with Paragraphs 12.01.C.2.a through 12.01.C.2.e, inclusive.

12.02 *Change of Contract Times*

A. The Contract Times may only be changed by a Change Order. Any Claim for an adjustment in the Contract Times shall be based on written notice submitted by the party making the Claim to the Engineer and the other party to the Contract in accordance with the provisions of Paragraph 10.05.

B. Any adjustment of the Contract Times covered by a Change Order or any Claim for an adjustment in the Contract Times will be determined in accordance with the provisions of this Article 12.

12.03 *Delays*

A. Where Contractor is prevented from completing any part of the Work within the Contract Times due to delay beyond the control of Contractor, the Contract Times will be extended in an amount equal to the time lost due to such delay if a Claim is made therefor as provided in Paragraph 12.02.A. Delays beyond the control of Contractor shall include, but not be limited to, acts or neglect by Owner, acts or neglect of utility owners or other contractors performing other work as contemplated by Article 7, fires, floods, epidemics, abnormal weather conditions, acts of war or terrorism, or acts of God (force majeure).

B. If Owner, Engineer, or other contractors or utility owners performing other work for Owner as contemplated by Article 7, or anyone for whom Owner is responsible, delays, disrupts, or interferes with the performance or progress of the Work, then Contractor shall be entitled to an equitable adjustment in the Contract Price or the Contract Times, or both. Contractor's entitlement to an adjustment of the Contract Times is conditioned on such adjustment being essential to Contractor's ability to complete the Work within the Contract Times.

C. If Contractor is delayed in the performance or progress of the Work by fire, flood, epidemic, abnormal weather conditions, acts of war or terrorism, acts of God, acts or failures to act of utility owners not under the control of Owner, or other causes not the fault of and beyond control of Owner and Contractor, then Contractor shall be entitled to an equitable adjustment in Contract

Copyright © 2007 National Society of Professional Engineers for EJCDC. All rights reserved.

Times, if such adjustment is essential to Contractor's ability to complete the Work within the Contract Times. Such an adjustment shall be Contractor's sole and exclusive remedy for the delays described in this Paragraph 12.03.C.

D. Owner, Engineer, and their officers, directors, members, partners, employees, agents, consultants, or subcontractors shall not be liable to Contractor for any claims, costs, losses, or damages (including but not limited to all fees and charges of engineers, architects, attorneys, and other professionals and all court or arbitration or other dispute resolution costs) sustained by Contractor on or in connection with any other project or anticipated project.

E. Contractor shall not be entitled to an adjustment in Contract Price or Contract Times for delays within the control of Contractor. Delays attributable to and within the control of a Subcontractor or Supplier shall be deemed to be delays within the control of Contractor.

ARTICLE 13 – TESTS AND INSPECTIONS; CORRECTION, REMOVAL OR ACCEPTANCE OF DEFECTIVE WORK

13.01 *Notice of Defects*

A. Prompt notice of all defective Work of which Owner or Engineer has actual knowledge will be given to Contractor. Defective Work may be rejected, corrected, or accepted as provided in this Article 13.

13.02 *Access to Work*

A. Owner, Engineer, their consultants and other representatives and personnel of Owner, independent testing laboratories, and governmental agencies with jurisdictional interests will have access to the Site and the Work at reasonable times for their observation, inspection, and testing. Contractor shall provide them proper and safe conditions for such access and advise them of Contractor's safety procedures and programs so that they may comply therewith as applicable.

13.03 *Tests and Inspections*

A. Contractor shall give Engineer timely notice of readiness of the Work for all required inspections, tests, or approvals and shall cooperate with inspection and testing personnel to facilitate required inspections or tests.

B. Owner shall employ and pay for the services of an independent testing laboratory to perform all inspections, tests, or approvals required by the Contract Documents except:

1. for inspections, tests, or approvals covered by Paragraphs 13.03.C and 13.03.D below;

2. that costs incurred in connection with tests or inspections conducted pursuant to Paragraph 13.04.B shall be paid as provided in Paragraph 13.04.C; and

3. as otherwise specifically provided in the Contract Documents.

Copyright © 2007 National Society of Professional Engineers for EJCDC. All rights reserved.
Revisions highlighted within the text have been prepared by Woodard & Curran on behalf Owner

C. If Laws or Regulations of any public body having jurisdiction require any Work (or part thereof) specifically to be inspected, tested, or approved by an employee or other representative of such public body, Contractor shall assume full responsibility for arranging and obtaining such inspections, tests, or approvals, pay all costs in connection therewith, and furnish Engineer the required certificates of inspection or approval.

D. Except as provided in 13.03.B above and where responsibility for a specific inspection or test is expressly allocated to Owner in the Specifications or by Laws and Regulations, Contractor shall be responsible for arranging and obtaining and shall pay all costs in connection with any inspections, tests, or approvals required for Owner's and Engineer's acceptance of materials or equipment to be incorporated in the Work; or acceptance of materials, mix designs, or equipment submitted for approval prior to Contractor's purchase thereof for incorporation in the Work. Such inspections, tests, or approvals shall be performed by organizations acceptable to Owner and Engineer.

E. If any Work (or the work of others) that is to be inspected, tested, or approved is covered by Contractor without written concurrence of Engineer, Contractor shall, if requested by Engineer, uncover such Work for observation.

F. Uncovering Work as provided in Paragraph 13.03.E shall be at Contractor's expense. ~~unless Contractor has given Engineer timely notice of Contractor's intention to cover the same and Engineer has not acted with reasonable promptness in response to such notice.~~

13.04 *Uncovering Work*

A. If any Work is covered contrary to the written request of Engineer, it must, if requested by Engineer, be uncovered for Engineer's observation and replaced at Contractor's expense.

B. If Engineer considers it necessary or advisable that covered Work be observed by Engineer or inspected or tested by others, Contractor, at Engineer's request, shall uncover, expose, or otherwise make available for observation, inspection, or testing as Engineer may require, that portion of the Work in question, furnishing all necessary labor, material, and equipment.

C. If it is found that the uncovered Work is defective, Contractor shall pay all claims, costs, losses, and damages (including but not limited to all fees and charges of engineers, architects, attorneys, and other professionals and all court or arbitration or other dispute resolution costs) arising out of or relating to such uncovering, exposure, observation, inspection, and testing, and of satisfactory replacement or reconstruction (including but not limited to all costs of repair or replacement of work of others); and Owner shall be entitled to an appropriate decrease in the Contract Price. If the parties are unable to agree as to the amount thereof, Owner may make a Claim therefor as provided in Paragraph 10.05.

D. If the uncovered Work is not found to be defective, Contractor shall be allowed an increase in the Contract Price or an extension of the Contract Times, or both, directly attributable to such uncovering, exposure, observation, inspection, testing, replacement, and reconstruction. If the parties are unable to agree as to the amount or extent thereof, Contractor may make a Claim therefor as provided in Paragraph 10.05.

Copyright © 2007 National Society of Professional Engineers for EJCDC. All rights reserved.
Revisions highlighted within the text have been prepared by Woodard & Curran on behalf Owner

13.05 *Owner May Stop the Work*

A. If the Work is defective, or Contractor fails to supply sufficient skilled workers or suitable materials or equipment, or fails to perform the Work in such a way that the completed Work will conform to the Contract Documents, Owner may order Contractor to stop the Work, or any portion thereof, until the cause for such order has been eliminated; however, this right of Owner to stop the Work shall not give rise to any duty on the part of Owner to exercise this right for the benefit of Contractor, any Subcontractor, any Supplier, any other individual or entity, or any surety for, or employee or agent of any of them.

13.06 *Correction or Removal of Defective Work*

A. Promptly after receipt of written notice, Contractor shall correct all defective Work, whether or not fabricated, installed, or completed, or, if the Work has been rejected by Engineer, remove it from the Project and replace it with Work that is not defective. Contractor shall pay all claims, costs, losses, and damages (including but not limited to all fees and charges of engineers, architects, attorneys, and other professionals and all court or arbitration or other dispute resolution costs) arising out of or relating to such correction or removal (including but not limited to all costs of repair or replacement of work of others).

B. When correcting defective Work under the terms of this Paragraph 13.06 or Paragraph 13.07, Contractor shall take no action that would void or otherwise impair Owner's special warranty and guarantee, if any, on said Work.

13.07 *Correction Period*

A. If within one year after the date of Substantial Completion (or such longer period of time as may be prescribed by the terms of any applicable special guarantee required by the Contract Documents) or by any specific provision of the Contract Documents, any Work is found to be defective, or if the repair of any damages to the land or areas made available for Contractor's use by Owner or permitted by Laws and Regulations as contemplated in Paragraph 6.11.A is found to be defective, Contractor shall promptly, without cost to Owner and in accordance with Owner's written instructions:

1. repair such defective land or areas; or

2. correct such defective Work; or

3. if the defective Work has been rejected by Owner, remove it from the Project and replace it with Work that is not defective, and

4. satisfactorily correct or repair or remove and replace any damage to other Work, to the work of others or other land or areas resulting therefrom.

B. If Contractor does not promptly comply with the terms of Owner's written instructions, or in an emergency where delay would cause serious risk of loss or damage, Owner may have the defective Work corrected or repaired or may have the rejected Work removed and replaced. All claims, costs, losses, and damages (including but not limited to all fees and charges of engineers, architects, attorneys, and other professionals and all court or arbitration or other dispute resolution

Copyright © 2007 National Society of Professional Engineers for EJCDC. All rights reserved.
Revisions highlighted within the text have been prepared by Woodard & Curran on behalf Owner

costs) arising out of or relating to such correction or repair or such removal and replacement (including but not limited to all costs of repair or replacement of work of others) will be paid by Contractor and may be deducted from amounts otherwise due the Contractor.

C. In special circumstances where a particular item of equipment is placed in continuous service before Substantial Completion of all the Work, the correction period for that item may start to run from an earlier date if so provided in the Specifications.

D. Where defective Work, including materials, equipment and supplies or as defined in manufacturers' and Suppliers' warranties (and damage to other Work resulting therefrom) has been corrected or removed and replaced under this Paragraph 13.07, the correction period hereunder with respect to such Work will be extended for an additional period of one year after such correction or removal and replacement has been satisfactorily completed and the terms of this Paragraph 13.07 will continue to apply.

E. Contractor's obligations under this Paragraph 13.07 are in addition to any other obligation or warranty. The provisions of this Paragraph 13.07 shall not be construed as a substitute for, or a waiver of, the provisions of any applicable statute of limitation or repose.

13.08 *Acceptance of Defective Work*

A. If, instead of requiring correction or removal and replacement of defective Work, Owner (and, prior to Engineer's recommendation of final payment, Engineer) prefers to accept it, Owner may do so. Contractor shall pay all claims, costs, losses, and damages (including but not limited to all fees and charges of engineers, architects, attorneys, and other professionals and all court or arbitration or other dispute resolution costs) attributable to Owner's evaluation of and determination to accept such defective Work (such costs to be approved by Engineer as to reasonableness) and for the diminished value of the Work to the extent not otherwise paid by Contractor pursuant to this sentence. If any such acceptance occurs prior to Engineer's recommendation of final payment, a Change Order will be issued incorporating the necessary revisions in the Contract Documents with respect to the Work, and Owner shall be entitled to an appropriate decrease in the Contract Price, reflecting the diminished value of Work so accepted. If the parties are unable to agree as to the amount thereof, Owner may make a Claim therefor as provided in Paragraph 10.05. If the acceptance occurs after such recommendation, an appropriate amount will be paid by Contractor to Owner.

13.09 *Owner May Correct Defective Work*

A. If Contractor fails within a reasonable time after written notice from Engineer to correct defective Work, or to remove and replace rejected Work as required by Engineer in accordance with Paragraph 13.06.A, or if Contractor fails to perform the Work in accordance with the Contract Documents, or if Contractor fails to comply with any other provision of the Contract Documents, Owner may, after seven days written notice to Contractor, or immediately in the case of an emergency, correct, or remedy any such deficiency.

Copyright © 2007 National Society of Professional Engineers for EJCDC. All rights reserved.
Revisions highlighted within the text have been prepared by Woodard & Curran on behalf Owner

B. In exercising the rights and remedies under this Paragraph 13.09, Owner shall proceed expeditiously. In connection with such corrective or remedial action, Owner may exclude Contractor from all or part of the Site, take possession of all or part of the Work and suspend Contractor's services related thereto, take possession of Contractor's tools, appliances, construction equipment and machinery at the Site, and incorporate in the Work all materials and equipment stored at the Site or for which Owner has paid Contractor but which are stored elsewhere. Contractor shall allow Owner, Owner's representatives, agents and employees, Owner's other contractors, and Engineer and Engineer's consultants access to the Site to enable Owner to exercise the rights and remedies under this Paragraph.

C. All claims, costs, losses, and damages (including but not limited to all fees and charges of engineers, architects, attorneys, and other professionals and all court or arbitration or other dispute resolution costs) incurred or sustained by Owner in exercising the rights and remedies under this Paragraph 13.09 will be charged against Contractor, and a Change Order will be issued incorporating the necessary revisions in the Contract Documents with respect to the Work; and Owner shall be entitled to an appropriate decrease in the Contract Price. If the parties are unable to agree as to the amount of the adjustment, Owner may make a Claim therefor as provided in Paragraph 10.05. Such claims, costs, losses and damages will include but not be limited to all costs of repair, or replacement of work of others destroyed or damaged by correction, removal, or replacement of Contractor's defective Work.

D. Contractor shall not be allowed an extension of the Contract Times because of any delay in the performance of the Work attributable to the exercise by Owner of Owner's rights and remedies under this Paragraph 13.09.

ARTICLE 14 – PAYMENTS TO CONTRACTOR AND COMPLETION

14.01 *Schedule of Values*

A. The Schedule of Values established as provided in Paragraph 2.07.A will serve as the basis for progress payments and will be incorporated into a form of Application for Payment acceptable to Engineer. Progress payments on account of Unit Price Work will be based on the number of units completed.

14.02 *Progress Payments*

A. Applications for Payments:

1. At least 20 days before the date established in the Agreement for each progress payment (but not more often than once a month), Contractor shall submit to Engineer for review an Application for Payment filled out and signed by Contractor covering the Work completed as of the date of the Application and accompanied by such supporting documentation as is required by the Contract Documents. If payment is requested on the basis of materials and equipment not incorporated in the Work but delivered and suitably stored at the Site or at another location agreed to in writing, the Application for Payment shall also be accompanied by a bill of sale, invoice, or other documentation warranting that Owner has received the materials and equipment free and clear of all Liens and evidence that the materials and

Copyright © 2007 National Society of Professional Engineers for EJCDC. All rights reserved.
Revisions highlighted within the text have been prepared by Woodard & Curran on behalf Owner

equipment are covered by appropriate property insurance or other arrangements to protect Owner's interest therein, all of which must be satisfactory to Owner.

2. Beginning with the second Application for Payment, each Application shall include an affidavit of Contractor stating that all previous progress payments received on account of the Work have been applied on account to discharge Contractor's legitimate obligations associated with prior Applications for Payment.

3. The amount of retainage with respect to progress payments will be as stipulated in the Agreement.

B. Review of Applications:

1. Engineer will, within 10 days after receipt of each Application for Payment, either indicate in writing a recommendation of payment and present the Application to Owner or return the Application to Contractor indicating in writing Engineer's reasons for refusing to recommend payment. In the latter case, Contractor may make the necessary corrections and resubmit the Application.

2. Engineer's recommendation of any payment requested in an Application for Payment will constitute a representation by Engineer to Owner, based on Engineer's observations of the executed Work as an experienced and qualified design professional, and on Engineer's review of the Application for Payment and the accompanying data and schedules, that to the best of Engineer's knowledge, information and belief:

   a. the Work has progressed to the point indicated;

   b. the quality of the Work is generally in accordance with the Contract Documents (subject to an evaluation of the Work as a functioning whole prior to or upon Substantial Completion, the results of any subsequent tests called for in the Contract Documents, a final determination of quantities and classifications for Unit Price Work under Paragraph 9.07, and any other qualifications stated in the recommendation); and

   c. the conditions precedent to Contractor's being entitled to such payment appear to have been fulfilled in so far as it is Engineer's responsibility to observe the Work.

3. By recommending any such payment Engineer will not thereby be deemed to have represented that:

   a. inspections made to check the quality or the quantity of the Work as it has been performed have been exhaustive, extended to every aspect of the Work in progress, or involved detailed inspections of the Work beyond the responsibilities specifically assigned to Engineer in the Contract Documents; or

   b. there may not be other matters or issues between the parties that might entitle Contractor to be paid additionally by Owner or entitle Owner to withhold payment to Contractor.

Copyright © 2007 National Society of Professional Engineers for EJCDC. All rights reserved.
Revisions highlighted within the text have been prepared by Woodard & Curran on behalf Owner

4. Neither Engineer's review of Contractor's Work for the purposes of recommending payments nor Engineer's recommendation of any payment, including final payment, will impose responsibility on Engineer:

   a. to supervise, direct, or control the Work, or

   b. for the means, methods, techniques, sequences, or procedures of construction, or the safety precautions and programs incident thereto, or

   c. for Contractor's failure to comply with Laws and Regulations applicable to Contractor's performance of the Work, or

   d. to make any examination to ascertain how or for what purposes Contractor has used the moneys paid on account of the Contract Price, or

   e. to determine that title to any of the Work, materials, or equipment has passed to Owner free and clear of any Liens.

5. Engineer may refuse to recommend the whole or any part of any payment if, in Engineer's opinion, it would be incorrect to make the representations to Owner stated in Paragraph 14.02.B.2. Engineer may also refuse to recommend any such payment or, because of subsequently discovered evidence or the results of subsequent inspections or tests, revise or revoke any such payment recommendation previously made, to such extent as may be necessary in Engineer's opinion to protect Owner from loss because:

   a. the Work is defective, or completed Work has been damaged, requiring correction or replacement;

   b. the Contract Price has been reduced by Change Orders;

   c. Owner has been required to correct defective Work or complete Work in accordance with Paragraph 13.09; or

   d. Engineer has actual knowledge of the occurrence of any of the events enumerated in Paragraph 15.02.A.

C. Payment Becomes Due:

1. Ten days after presentation of the Application for Payment to Owner with Engineer's recommendation, the amount recommended will (subject to the provisions of Paragraph 14.02.D) become due, and when due will be paid by Owner to Contractor.

D. Reduction in Payment:

1. Owner may refuse to make payment of the full amount recommended by Engineer because:

   a. claims have been made against Owner on account of Contractor's performance or furnishing of the Work;

Copyright © 2007 National Society of Professional Engineers for EJCDC. All rights reserved.
Revisions highlighted within the text have been prepared by Woodard & Curran on behalf Owner

b. Liens have been filed in connection with the Work, except where Contractor has delivered a specific bond satisfactory to Owner to secure the satisfaction and discharge of such Liens and provides an indemnity satisfactory to Owner for all claims, costs, losses and damages arising out of such Liens;

c. there are other items entitling Owner to a set-off against the amount recommended including liability for liquidated damages and correction of defective work by Owner or others; or

d. Owner has actual knowledge of the occurrence of any of the events enumerated in Paragraphs 14.02.B.5.a through 14.02.B.5.c or Paragraph 15.02.A.

2. If Owner refuses to make payment of the full amount recommended by Engineer, Owner will give Contractor immediate written notice (with a copy to Engineer) stating the reasons for such action and promptly pay Contractor any amount remaining after deduction of the amount so withheld. Owner shall promptly pay Contractor the amount so withheld, or any adjustment thereto agreed to by Owner and Contractor, when Contractor remedies the reasons for such action.

3. Upon a subsequent determination that Owner's refusal of payment was not justified, the amount wrongfully withheld shall be treated as an amount due as determined by Paragraph 14.02.C.1 and subject to interest as provided in the Agreement.

14.03 *Contractor's Warranty of Title*

A. Contractor warrants and guarantees that title to all Work, materials, and equipment covered by any Application for Payment, whether incorporated in the Project or not, will pass to Owner no later than the time of payment free and clear of all Liens.

14.04 *Substantial Completion*

A. When Contractor considers the entire Work ready for its intended use and final testing has been completed in accordance with the General Requirements, Contractor shall notify Owner and Engineer in writing that the entire Work is substantially complete (except for items specifically listed by Contractor in the Punchlist as incomplete) using the Notice of Substantial Completion form included in the Contract Documents, submit the Contractor's written general warranty and guarantee per Paragraph 6.19.D., and request that Engineer issue a certificate of Substantial Completion.

B. Promptly after Contractor's notification, Owner, Contractor, and Engineer shall make an inspection of the Work to determine the status of completion. If Engineer does not consider the Work substantially complete, Engineer will notify Contractor in writing giving the reasons therefor.

Copyright © 2007 National Society of Professional Engineers for EJCDC. All rights reserved.
Revisions highlighted within the text have been prepared by Woodard & Curran on behalf Owner

C. If Engineer considers the Work substantially complete, Engineer will deliver to Owner a tentative certificate of Substantial Completion which shall fix the date of Substantial Completion using the Certificate of Substantial Completion included in the Contract Documents. There shall be attached to the certificate a Punch List (tentative list of items to be completed or corrected before final payment). Owner shall have seven days after receipt of the tentative certificate during which to make written objection to Engineer as to any provisions of the certificate or attached list. If, after considering such objections, Engineer concludes that the Work is not substantially complete, Engineer will, within 14 days after submission of the tentative certificate to Owner, notify Contractor in writing, stating the reasons therefor. If, after consideration of Owner's objections, Engineer considers the Work substantially complete, Engineer will, within said 14 days, execute and deliver to Owner and Contractor a definitive certificate of Substantial Completion (with a revised Punch List (tentative list of items to be completed or corrected)) reflecting such changes from the tentative certificate as Engineer believes justified after consideration of any objections from Owner.

D. At the time of delivery of the tentative certificate of Substantial Completion, Engineer will deliver to Owner and Contractor a written recommendation as to division of responsibilities pending final payment between Owner and Contractor with respect to security, operation, safety, and protection of the Work, maintenance, heat, utilities, insurance, and warranties and guarantees. Unless Owner and Contractor agree otherwise in writing and so inform Engineer in writing prior to Engineer's issuing the definitive certificate of Substantial Completion, Engineer's aforesaid recommendation will be binding on Owner and Contractor until final payment.

E. Owner shall have the right to exclude Contractor from the Site after the date of Substantial Completion subject to allowing Contractor reasonable access to remove its property and complete or correct items on the tentative list.

14.05 *Partial Utilization*

A. Prior to Substantial Completion of all the Work, Owner may use or occupy any substantially completed part of the Work which has specifically been identified in the Contract Documents, or which Owner, Engineer, and Contractor agree constitutes a separately functioning and usable part of the Work that can be used by Owner for its intended purpose without significant interference with Contractor's performance of the remainder of the Work, subject to the following conditions:

1. Owner at any time may request Contractor in writing to permit Owner to use or occupy any such part of the Work which Owner believes to be ready for its intended use and substantially complete. If and when Contractor agrees that such part of the Work is substantially complete, Contractor, Owner, and Engineer will follow the procedures of Paragraph 14.04.A through D for that part of the Work.

2. Contractor at any time may notify Owner and Engineer in writing that Contractor considers any such part of the Work ready for its intended use and substantially complete and request Engineer to issue a certificate of Substantial Completion for that part of the Work.

Copyright © 2007 National Society of Professional Engineers for EJCDC. All rights reserved.
Revisions highlighted within the text have been prepared by Woodard & Curran on behalf Owner

3. Within a reasonable time after either such request, Owner, Contractor, and Engineer shall make an inspection of that part of the Work to determine its status of completion. If Engineer does not consider that part of the Work to be substantially complete, Engineer will notify Owner and Contractor in writing giving the reasons therefor. If Engineer considers that part of the Work to be substantially complete, the provisions of Paragraph 14.04 will apply with respect to certification of Substantial Completion of that part of the Work and the division of responsibility in respect thereof and access thereto.

4. No use or occupancy or separate operation of part of the Work may occur prior to compliance with the requirements of Paragraph 5.10 regarding property insurance.

B. Owner may request in writing that Contractor permit Owner to separately operate any part of the Work although it is not substantially complete subject to the following conditions.

1. A copy of such request will be sent to Engineer and, within a reasonable time thereafter, Owner, Contractor and Engineer shall make an inspection of that part of the Work not substantially complete to determine the status of completion and will prepare a Punch List before final payment.

2. If Contractor does not indicate in writing to Owner and Engineer that such part of the Work is not ready for separate operation by Owner, Engineer will finalize the Punch List and will deliver such list to Owner and Contractor, together with a written recommendation as to the division of responsibilities between Owner and Contractor with respect to security, operation, safety, maintenance, utilities, insurance, warranties and guarantees for that part of the Work pending final payment.

3. The Engineer's recommendation and Punch List will become binding upon Owner and Contractor at the time the Owner takes over and separately operates such part of the Work unless otherwise agreed in writing and so informed Engineer.

4. During such separate operation by Owner and prior to Substantial Completion of such part of the Work, Owner shall allow Contractor reasonable access to complete or correct Punch List and to complete other related Work.

14.06 *Final Inspection*

A. Upon written notice from Contractor that the entire Work or an agreed portion thereof is complete, Engineer will promptly make a final inspection with Owner and Contractor and will notify Contractor in writing of all particulars in which this inspection reveals that the Work is incomplete or defective. Contractor shall immediately take such measures as are necessary to complete such Work or remedy such deficiencies.

Copyright © 2007 National Society of Professional Engineers for EJCDC. All rights reserved.
Revisions highlighted within the text have been prepared by Woodard & Curran on behalf Owner

14.07 *Final Payment*

A. Application for Payment:

1. After Contractor has, in the opinion of Engineer, satisfactorily completed all corrections identified during the final inspection and has delivered, in accordance with the Contract Documents, all maintenance and operating instructions, schedules, guarantees, warranties, updated Contractor's written general warranty and guarantee per Paragraph 6.19.D if modified, bonds, certificates or other evidence of insurance, certificates of inspection, marked-up record documents (as provided in Paragraph 6.12), and other documents, and Engineer has indicated that the Work is acceptable (subject to the provisions of Paragraph 14.09), Contractor may make application for final payment following the procedure for progress payments.

2. The final Application for Payment shall be accompanied (except as previously delivered) by:

   a. all documentation called for in the Contract Documents, including but not limited to the evidence of insurance required by Paragraph 5.04.B.6;

   b. consent of the surety, if any, to final payment;

   c. a list of all Claims against Owner that Contractor believes are unsettled;

   ~~c.~~d. Certificate of Completion; and

   ~~d.~~e. complete and legally effective releases or waivers (satisfactory to Owner) of all Lien rights arising out of or Liens filed in connection with the Work.

3. In lieu of the releases or waivers of Liens specified in Paragraph 14.07.A.2 and as approved by Owner, Contractor may furnish receipts or releases in full and an affidavit of Contractor that: (i) the releases and receipts include all labor, services, material, and equipment for which a Lien could be filed; and (ii) all payrolls, material and equipment bills, and other indebtedness connected with the Work for which Owner might in any way be responsible, or which might in any way result in liens or other burdens on Owner's property, have been paid or otherwise satisfied. If any Subcontractor or Supplier fails to furnish such a release or receipt in full, Contractor may furnish a bond or other collateral satisfactory to Owner to indemnify Owner against any Lien.

B. Engineer's Review of Application and Acceptance:

1. If, on the basis of Engineer's observation of the Work during construction and final inspection, and Engineer's review of the final Application for Payment and accompanying documentation as required by the Contract Documents, Engineer is satisfied that the Work has been completed and Contractor's other obligations under the Contract Documents have been fulfilled, Engineer will, within ten days after receipt of the final Application for Payment, indicate in writing Engineer's recommendation of payment and present the Application for Payment to Owner for payment. At the same time Engineer will also give written notice to Owner and Contractor that the Work is acceptable subject to the provisions of Paragraph 14.09. Otherwise, Engineer will return the Application for Payment to

Copyright © 2007 National Society of Professional Engineers for EJCDC. All rights reserved.
Revisions highlighted within the text have been prepared by Woodard & Curran on behalf Owner

Contractor, indicating in writing the reasons for refusing to recommend final payment, in which case Contractor shall make the necessary corrections and resubmit the Application for Payment.

C. Payment Becomes Due:

1. Thirty days after the presentation to Owner of the Application for Payment and accompanying documentation, the amount recommended by Engineer, less any sum Owner is entitled to set off against Engineer's recommendation, including but not limited to liquidated damages, will become due and will be paid by Owner to Contractor.

14.08 *Final Completion Delayed*

A. If, through no fault of Contractor, final completion of the Work is significantly delayed, and if Engineer so confirms, Owner shall, upon receipt of Contractor's final Application for Payment (for Work fully completed and accepted) and recommendation of Engineer, and without terminating the Contract, make payment of the balance due for that portion of the Work fully completed and accepted as detailed on the Certificate of Completion. If the remaining balance to be held by Owner for Work not fully completed or corrected is less than the retainage stipulated in the Agreement, and if bonds have been furnished as required in Paragraph 5.01, the written consent of the surety to the payment of the balance due for that portion of the Work fully completed and accepted shall be submitted by Contractor to Engineer with the Application for such payment. Such payment shall be made under the terms and conditions governing final payment, except that it shall not constitute a waiver of Claims.

14.09 *Waiver of Claims*

A. The making and acceptance of final payment will constitute:

1. a waiver of all Claims by Owner against Contractor, except Claims arising from unsettled Liens, from defective Work appearing after final inspection pursuant to Paragraph 14.06, from failure to comply with the Contract Documents or the terms of any special guarantees specified therein, or from Contractor's continuing obligations under the Contract Documents; and

2. a waiver of all Claims by Contractor against Owner other than those previously made in accordance with the requirements herein and expressly acknowledged by Owner in writing as still unsettled.

ARTICLE 15 – SUSPENSION OF WORK AND TERMINATION

15.01 *Owner May Suspend Work*

A. At any time and without cause, Owner may suspend the Work or any portion thereof for a period of not more than 90 consecutive days by notice in writing to Contractor and Engineer which will fix the date on which Work will be resumed. Contractor shall resume the Work on the date so fixed. Contractor shall be granted an adjustment in the Contract Price or an extension of the Contract Times, or both, directly attributable to any such suspension if Contractor makes a Claim therefor as provided in Paragraph 10.05.

Copyright © 2007 National Society of Professional Engineers for EJCDC. All rights reserved.
Revisions highlighted within the text have been prepared by Woodard & Curran on behalf Owner

15.02 *Owner May Terminate for Cause*

A. The occurrence of any one or more of the following events will justify termination for cause:

1. Contractor's ~~persistent~~ failure to perform the Work in accordance with the Contract Documents (including, but not limited to, failure to supply sufficient skilled workers or suitable materials or equipment or failure to adhere to the Progress Schedule established under Paragraph 2.07 as adjusted from time to time pursuant to Paragraph 6.04);

2. Contractor's disregard of Laws or Regulations of any public body having jurisdiction;

3. Contractor's repeated disregard of the authority of Engineer; or

4. Contractor's violation in any substantial way of any provisions of the Contract Documents; or~~.~~

5. Contractor commences a voluntary case under any chapter of the Bankruptcy Code (Title 11, United States Code), as now or hereafter in effect, or if Contractor takes any equivalent or similar action by filing a petition or otherwise under any Laws and Regulations in effect at such time relating to the bankruptcy or insolvency; or

6. a petition is filed against Contractor under any chapter of the Bankruptcy Code as now or hereafter in effect at the time of filing, or if a petition is filed seeking any such equivalent or similar relief against Contractor under any Laws and Regulations in effect at the time relating to bankruptcy or insolvency; or

7. Contractor makes a general assignment for the benefit of creditors; or

8. a trustee, receiver, custodian or agent of Contractor is appointed under applicable law or under contract, whose appointment or authority to take charge of property of Contractor is for the purpose of enforcing a Lien against such property or for the purpose of general administration of such property for the benefit of Contractor's creditors; or

9. Contractor admits in writing its inability to pay its debts generally as they become due.

B. If one or more of the events identified in Paragraph 15.02.A occur, Owner may, after giving Contractor (and surety) seven days written notice of its intent to terminate the services of Contractor:

1. exclude Contractor from the Site, and take possession of the Work and of all Contractor's tools, appliances, construction equipment, and machinery at the Site, and use the same to the full extent they could be used by Contractor (without liability to Contractor for trespass or conversion);

2. incorporate in the Work all materials and equipment stored at the Site or for which Owner has paid Contractor but which are stored elsewhere; and

3. complete the Work as Owner may deem expedient.

Copyright © 2007 National Society of Professional Engineers for EJCDC. All rights reserved.
Revisions highlighted within the text have been prepared by Woodard & Curran on behalf Owner

C. If Owner proceeds as provided in Paragraph 15.02.B, Contractor shall not be entitled to receive any further payment until the Work is completed. If the unpaid balance of the Contract Price exceeds all claims, costs, losses, and damages (including but not limited to all fees and charges of engineers, architects, attorneys, and other professionals and all court or arbitration or other dispute resolution costs) sustained by Owner arising out of or relating to completing the Work, such excess will be paid to Contractor. If such claims, costs, losses, and damages exceed such unpaid balance, Contractor shall pay the difference to Owner. Such claims, costs, losses, and damages incurred by Owner will be reviewed by Engineer as to their reasonableness and, when so approved by Engineer, incorporated in a Change Order. When exercising any rights or remedies under this Paragraph, Owner shall not be required to obtain the lowest price for the Work performed.

D. Notwithstanding Paragraphs 15.02.B and 15.02.C, Contractor's services will not be terminated if Contractor begins within seven days of receipt of notice of intent to terminate to correct its failure to perform and proceeds diligently to cure such failure within no more than 30 days of receipt of said notice.

E. Where Contractor's services have been so terminated by Owner, the termination will not affect any rights or remedies of Owner against Contractor then existing or which may thereafter accrue. Any retention or payment of moneys due Contractor by Owner will not release Contractor from liability.

F. If and to the extent that Contractor has provided a performance bond under the provisions of Paragraph 5.01.A, the termination procedures of that bond shall supersede the provisions of Paragraphs 15.02.B and 15.02.C.

15.03 *Owner May Terminate For Convenience*

A. Upon seven days written notice to Contractor and Engineer, Owner may, without cause and without prejudice to any other right or remedy of Owner, terminate the Contract. In such case, Contractor shall be paid for (without duplication of any items):

1. completed and acceptable Work executed in accordance with the Contract Documents prior to the effective date of termination, including fair and reasonable sums for overhead and profit on such Work;

2. expenses sustained prior to the effective date of termination in performing services and furnishing labor, materials, or equipment as required by the Contract Documents in connection with uncompleted Work, plus fair and reasonable sums for overhead and profit on such expenses;

3. ~~all~~ reasonable claims, costs, losses, and damages (including but not limited to ~~all~~ reasonable fees and charges of engineers, architects, attorneys, and other professionals and ~~all~~ reasonable court or arbitration or other dispute resolution costs) incurred in settlement of terminated contracts with Subcontractors, Suppliers, and others; and

4. reasonable expenses directly attributable to termination.

Copyright © 2007 National Society of Professional Engineers for EJCDC. All rights reserved.
Revisions highlighted within the text have been prepared by Woodard & Curran on behalf Owner

B. Contractor shall not be paid on account of loss of anticipated profits or revenue or other economic loss arising out of or resulting from such termination.

15.04 *Contractor May Stop Work or Terminate*

A. If, through no act or fault of Contractor, (i) the Work is suspended for more than 90 consecutive days by Owner or under an order of court or other public authority, or (ii) Engineer fails to act on any Application for Payment within 30 days after it is submitted, or (iii) Owner fails for 30 days to pay Contractor any sum finally determined to be due, then Contractor may, upon seven days written notice to Owner and Engineer, and provided Owner or Engineer do not remedy such suspension or failure within that time, terminate the Contract and recover from Owner payment on the same terms as provided in Paragraph 15.03.

B. In lieu of terminating the Contract and without prejudice to any other right or remedy, if Engineer has failed to act on an Application for Payment within 30 days after it is submitted, or Owner has failed for 30 days to pay Contractor any sum finally determined to be due, Contractor may, seven days after written notice to Owner and Engineer, stop the Work until payment is made of all such amounts due Contractor, including interest thereon. The provisions of this Paragraph 15.04 are not intended to preclude Contractor from making a Claim under Paragraph 10.05 for an adjustment in Contract Price or Contract Times or otherwise for expenses or damage directly attributable to Contractor's stopping the Work as permitted by this Paragraph.

ARTICLE 16 – DISPUTE RESOLUTION

16.01 *Methods and Procedures*

A. Subject to the requirements in Paragraph 10.05, Owner and Contractor agree that they will submit any and all unsettled Claims, counterclaims, disputes and other matters in question between them arising out of or relating to the Contract Documents ("disputes"), to mediation by senior management representatives of each party for a period of 5 days. If resolution is not achieved, then the dispute shall be submitted to formal mediation prior to either of them initiating against the other, a demand for arbitration pursuant to Paragraph 16.02, unless delay in initiating arbitration would irrevocably prejudice one of the Parties. Any time limits within which to file a demand for arbitration shall be suspended with respect to a dispute submitted to mediation within those same applicable time limits and shall remain suspended until 10 days after the termination of the mediation. The mediator of any dispute submitted to mediation shall not serve as arbitrator of such dispute unless otherwise agreed.

~~A.~~B. Subject to Paragraph 16.01.A, e~~E~~ither Owner or Contractor may request formal mediation of any Claim submitted to Engineer for a decision under Paragraph 10.05 before such decision becomes final and binding. The mediation will be governed by the Construction Industry Mediation Rules of the American Arbitration Association in effect as of the Effective Date of the Agreement. The request for mediation shall be submitted in writing to the American Arbitration Association and the other party to the Contract. Timely submission of the request shall stay the effect of Paragraph 10.05.E.

Copyright © 2007 National Society of Professional Engineers for EJCDC. All rights reserved.
Revisions highlighted within the text have been prepared by Woodard & Curran on behalf Owner

~~B.~~C. Owner and Contractor shall participate in the mediation process in good faith. The process shall be concluded within 60 days of filing of the request. The date of termination of the mediation shall be determined by application of the mediation rules referenced above.

~~C.~~D. If the Claim is not resolved by senior management mediation or formal mediation, Engineer's action under Paragraph 10.05.C or a denial pursuant to Paragraphs 10.05.C.3 or 10.05.D shall become final and binding 30 days after termination of the mediation unless, within that time period, Owner or Contractor:

1. elects in writing to invoke ~~any~~ the dispute resolution process pursuant to Paragraph 16.02~~provided for in the Supplementary Conditions~~; or

2. agrees with the other party to submit the Claim to another dispute resolution process.~~; or~~

~~2. gives written notice to the other party of the intent to submit the Claim to a court of competent jurisdiction.~~

16.02 *Arbitration*

A. All Claims or counterclaims, disputes, or other matters in question between Owner and Contractor arising out of or relating to the Contract Documents or the breach thereof (except for Claims which have been waived by the making or acceptance of final payment as provided by Paragraph 14.09) including but not limited to those not resolved under the provisions of Paragraphs 10.05 or 16.01, will be subject to arbitration in accordance with the rules of Construction Industry Rules of the American Arbitration Association, subject to the conditions and limitations of this Paragraph 16.02. This agreement to arbitrate, and any other agreement or consent to arbitrate entered into, will be specifically enforceable under the prevailing Laws of any court having jurisdiction.

B. The demand for arbitration will be filed in writing with the other party to this Contract and with the selected arbitrator or arbitration provider, and a copy will be sent to Engineer for information. The demand for arbitration will be made within the 30 day period specified in Paragraph 16.01.D, and in all other cases, within a reasonable time after the Claim or counterclaim, dispute, or other matter in question has arisen, and in no event shall any such demand be made after the date when institution of legal or equitable proceedings based on such Claim or other dispute or matter in question would be barred by the applicable statute of limitations.

C. No arbitration arising out of or relating to the Contract Documents shall include by consolidation, joinder, or in any other manner any other individual or entity (including Engineer, and Engineer's consultants and the officers, directors, partners, agents, employees or consultants of any of them) who is not a party to this Contract unless:

1. the inclusion of such other individual or entity is necessary if complete relief is to be afforded among those who are already parties to the arbitration; and

Copyright © 2007 National Society of Professional Engineers for EJCDC. All rights reserved.

2. such other individual or entity is substantially involved in a question of law or fact which is common to those who are already parties to the arbitration and which will arise in such proceedings.

D. Consolidation shall be by order of the arbitrator(s) in any pending case, or if the arbitrator(s) fail to make an order, a party may apply to a court of competent jurisdiction for such order. The foregoing agreement to arbitrate and other agreements to arbitrate with an additional person or entity shall be specifically enforceable in accordance with the Laws of any court having jurisdiction thereof.

E. The award rendered by the arbitrator(s) shall be consistent with the agreement of the parties, in writing, and include: (i) a concise breakdown of the award; (ii) a written explanation of the award specifically citing the Contract Document provisions deemed applicable and relied on in making the award.

F. The award will be final. Judgment may be entered upon it in any court having jurisdiction thereof, and it will not be subject to modification or appeal, subject to provisions of the controlling Laws relating to vacating or modifying an arbitral award.

G. If the parties decline to arbitrate, such Claims, disputes and other matters shall be decided by a court having jurisdiction.

16.03 *General*

A. The Contractor will require similar arbitration provisions in agreements with its Subcontractors and Suppliers.

B. Contractor shall not have the right to stop performance of the Work pending resolution of a Claim or dispute.

C. Notwithstanding any provision contained in this Article or elsewhere in the Contract Documents, the Owner reserves the following rights in connection with Claims and disputes between the Owner and the Contractor:

1. The right to institute legal action against the Contractor in any court of competent jurisdiction in lieu of demanding arbitration pursuant to this Article, in which case the Claims or disputes which are the subject of such action shall be decided by such court, and not by arbitration.

2. The right to obtain from any court of competent jurisdiction a stay of any arbitration instituted by the Contractor, provided that the application for such stay is made before the appointment of the neutral arbitrator in such arbitration, in which case the Claims or disputes which are the subject of such arbitration shall be decided by such court, and not by arbitration.

3. The right to require the Contractor to join as a party in any arbitration between the Owner and the Engineer relating to the Project, in which case the Contractor agrees to be bound by the decision of the arbitrator or arbitrators in such arbitration.

Copyright © 2007 National Society of Professional Engineers for EJCDC. All rights reserved.
Revisions highlighted within the text have been prepared by Woodard & Curran on behalf Owner

ARTICLE 17 – MISCELLANEOUS

17.01 *Giving Notice*

A. Whenever any provision of the Contract Documents requires the giving of written notice, it will be deemed to have been validly given if:

1. delivered in person to the individual or to a member of the firm or to an officer of the corporation for whom it is intended; or

2. delivered at or sent by registered or certified mail, postage prepaid, to the last business address known to the giver of the notice.

17.02 *Computation of Times*

A. When any period of time is referred to in the Contract Documents by days, it will be computed to exclude the first and include the last day of such period. If the last day of any such period falls on a Saturday or Sunday or on a day made a legal holiday by the law of the applicable jurisdiction, such day will be omitted from the computation.

17.03 *Cumulative Remedies*

A. The duties and obligations imposed by these General Conditions and the rights and remedies available hereunder to the parties hereto are in addition to, and are not to be construed in any way as a limitation of, any rights and remedies available to any or all of them which are otherwise imposed or available by Laws or Regulations, by special warranty or guarantee, or by other provisions of the Contract Documents. The provisions of this Paragraph will be as effective as if repeated specifically in the Contract Documents in connection with each particular duty, obligation, right, and remedy to which they apply.

17.04 *Survival of Obligations*

A. All representations, indemnifications, warranties, and guarantees made in, required by, or given in accordance with the Contract Documents, as well as all continuing obligations indicated in the Contract Documents, will survive final payment, completion, and acceptance of the Work or termination or completion of the Contract or termination of the services of Contractor.

17.05 *Controlling Law*

A. This Contract is to be governed by the law of the state in which the Project is located.

17.06 *Headings*

A. Article and paragraph headings are inserted for convenience only and do not constitute parts of these General Conditions.

Copyright © 2007 National Society of Professional Engineers for EJCDC. All rights reserved.
Revisions highlighted within the text have been prepared by Woodard & Curran on behalf Owner

17.07 *Professional Fees and Court Costs Included*

A. In any action or proceeding to enforce or interpret any contractual provision or to resolve any conflict or dispute relating to or arising from this Contract, the prevailing party shall be entitled to recover, as part of its claim, award or judgment, reasonable attorneys; fees and associated costs and expenses, including expenses of engineering, claims and other consultants.

END OF SECTION

Copyright © 2007 National Society of Professional Engineers for EJCDC. All rights reserved.

SECTION 00 73 05

SUPPLEMENTARY CONDITIONS

The following sections modify or supplement the Standard General Conditions of the Construction Contract ("General Conditions") included in Section 00 72 05 and are in addition to the modifications highlighted within the text thereof. All provisions which are not so modified or supplemented remain in full force and effect. The Supplementary Conditions may include certain provisions required by Laws and Regulations. Contractor is responsible to determine and obtain applicable Laws and Regulations and to review and interpret the full text of such Laws and Regulations.

The terms used in these Supplementary Conditions have the meanings stated in the Standard General Conditions and as may be included within the Sections listed below.

00 73 10 Project Specific Requirements
00 73 19 Health and Safety Requirements
00 73 43 Wage Rate Requirements
00 73 46 Wage Determination Schedule
00 73 73 Statutory Requirements

END OF SECTION

This page intentionally left blank

SECTION 00 73 10

PROJECT SPECIFIC REQUIREMENTS

GENERAL

The address system used herein is the same as the address system used in the General Conditions, with the prefix "SC" added thereto. Additional terms used in this Section have the meanings stated below, which are applicable to both the singular and plural thereof.

This Section may include certain provisions required by Laws and Regulations, but does not represent or reflect all applicable provisions and policies or Laws and Regulations, and may only include excerpts and portions thereof. Other required provisions and policies, and Laws and Regulations, shall be deemed to be so included and incorporated herein. Contractor is solely responsible to determine, obtain, review and interpret the full text of applicable provisions and policies, Regulations, and Laws.

Add the following immediately after Paragraph 2.05.B.

C. Additionally, within 10 days after the Effective Date of the Agreement, Contractor shall submit a Construction Operations Plan incorporating the schedules submitted pursuant to Paragraph 2.05.A and covering the following.

1. Construction methods and sequence of operations

2. Proposed Site access

3. Proposed erosion control measures and proposed measures to minimize impacts to existing vegetation and impacts to water quality in compliance with the General Requirements.

SC-2.07 ***Initial Acceptance of Schedules***

Add the following immediately after subparagraph 2.07.A.3.

4. Contractor's Construction Operations Plan submitted pursuant to Paragraph 2.05.C. will be acceptable to Engineer if it accurately and reasonably addresses all aspects of the Work.

SC 4.01 ***Availability of Lands***

Pursuant to Paragraph 4.01.A, easements and rights-of-way exist for the Project and are reflected on the Drawings.

SC-4.02 ***Subsurface and Physical Conditions***

A. Pursuant to Paragraph 4.02.A,

1. the following reports of explorations and tests of subsurface conditions at or contiguous to the Site are known to Owner:

   a. NONE

2. The following drawings of physical conditions relating to existing surface or subsurface structures at the Site (except Underground Facilities) are known to Owner:

   a. NONE

SC 4.05 ***Reference Points***

Pursuant to Paragraph 4.05.A, surveys exist for the Project and are reflected on the Drawings.

SC-4.06 ***Hazardous Environmental Conditions at Site***

A. Pursuant to Paragraph 4.06.A,

1. the following reports regarding Hazardous Environmental Conditions at the Site are known to Owner:

   a. NONE

SC-5.04 ***Contractor's Insurance***

Pursuant to Paragraph 5.04.B, in addition to the individuals and entities specified in subparagraph 5.04.B.1, include the following as loss payees.

State of Connecticut

Add the following immediately after subparagraph 5.04.B.7.

8. include the defense of the Town of Westbrook, CT (Owner). All insurance companies shall have the duty to defend the Town of Westbrook, CT against liability or property damage claims arising from the conduct of Contractor and/or agents or employees.

Replace the coverages listed in 5.04.C with the following:

1. Workers' Compensation insurance in the required amount, and Employers' Liability insurance in the following amounts:

Bodily injury by accident-	$100,000 each accident
Bodily injury by disease-	$500,000 each accident and,
Bodily injury by disease-	$100,000 each employee

The policy must provide coverage for benefits payable under the Connecticut Workers Compensation Act, and include the Voluntary Compensation endorsement.

2. During the term of the Contract, Contractor shall provide Public Liability insurance for bodily injury and property damage. The Public Liability insurance shall be written on a comprehensive form and include, without limitation, coverage for premises and operations, completed operations, independent contractors, broad form property damage, blanket contractual and personal injury. The required limits of liability are:

$2,000,000- General Aggregate
$2,000,000- Product-Completed Operations Aggregate
$1,000,000- Personal and Advertising Injury
$1,000,000- Each Occurrence
$ 50,000- Fire Damage/Fire
$ 5,000- Medical Expense/Person

3. Automobile Liability insurance shall be written with a Comprehensive Form and include coverage for owned, hired, and non-owned vehicles. The limit for any one accident or loss shall be $1,000,000.

4. Professional Liability insurance providing errors and omissions coverage for professional services rendered. The minimum limit of liability shall be $1,000,000 per claim, subject to a $2,000,000 aggregate.

SC-6.02 ***Labor; Working Hours***

Pursuant to Paragraph 6.02.B, regular working hours for this Project are 7:00 a.m. to 5:00 p.m., Monday through Friday.

SC-6.08 ***Permits***

Pursuant to subparagraph 6.08.A.1, Contractor shall comply with the following licenses and permits Owner has obtained for the Project.

- Connecticut Department of Transportation (CTDOT) Permit Approval, executed July 14, 2016, included in Section 00 31 00.

SC-6.09 ***Laws and Regulations***

Pursuant to Paragraph 6.09, the Contractor shall comply with additional requirements included in Section 00 73 73 and Section 01 15 00.

SC-6.20 ***Indemnification***

In Paragraph 6.20.A, line 2, after "Owner and Engineer", insert "and the State of Connecticut".

In Paragraph 6.20.B, line 1, after "Owner or Engineer", insert "and the State of Connecticut".

In subparagraph 6.20.B.1, line 2, after "Owner or Engineer", insert "and the State of Connecticut".

SC-7.01 ***Related Work at Site***

Pursuant to Paragraph 7.01, Owner has not and does not intend to separately contract for other work on the Project at the Site.

END OF SECTION

SECTION 00 73 19

HEALTH AND SAFETY REQUIREMENTS

Contractor shall comply with the following minimum requirements and is solely responsible to determine, obtain, review and interpret the full text of applicable Laws and Regulations.

A. Code of Federal Regulations, Chapter XVII-Occupational Safety and Health Administration (OSHA), Department of Labor, Title 29, Part 1926, Safety and Health Regulations for Construction

   1. Contractor shall strictly comply with the Hazard Communication Standard 1910.1200 regulated by OSHA, including providing and maintaining Safety Data Sheets, labeling of hazardous substances, and providing required protective equipment and training and instruction to personnel on the Site including Owner and Engineer's personnel.

   2. Perform confined space work in accordance with OSHA General Industry 1910.146: Permit Required Confined Space Entry.

B. ANSI/ASSE A10 series of safety construction standards including the "Manual of Accident Prevention In Construction" published by The Associated General Contractors of America

C. AASHTO Guide on Occupational Safety on Highway Construction Projects, Subpart N, 1926.550, relating to protection of personnel and equipment under electric lines and construction equipment clearances at overhead electric lines especially during operations using large vehicles

END OF SECTION

This page intentionally left blank

SECTION 00 73 43

WAGE RATE REQUIREMENTS

The content of this Section does not represent or reflect all applicable Laws and Regulations and may only include excerpts and portions of certain Laws and Regulations. Other provisions required by statute shall be deemed to be so included and incorporated herein. Contractor is solely responsible to determine, obtain, review and interpret the full text of applicable Laws and Regulations.

The Project is not subject to the prevailing wage laws per CGS §31-53(g).

This page intentionally left blank

SECTION 00 73 73

STATUTORY REQUIREMENTS

The address system used herein is the same as the address system used in the General Conditions and Supplementary Conditions, with the prefix "SC" added thereto. Additional terms used in this Section have the meanings stated below, which are applicable to both the singular and plural thereof.

The Project is specifically subject to the provisions of the Connecticut General Statutes ("CGS") and municipal codes and ordinances.

This Section may include certain provisions required by Laws and Regulations, but does not represent or reflect all applicable provisions and policies or Laws and Regulations, and may only include excerpts and portions thereof. Other required provisions and policies, and Laws and Regulations, shall be deemed to be so included and incorporated herein. Contractor is solely responsible to determine, obtain, review, and interpret the full text of applicable provisions and policies, Regulations, and Laws.

SC-6.02 ***Labor; Working Hours***

Add the following new subparagraphs immediately after subparagraph 6.02.A.1.

2. Comply with the requirements of CGS Chapters 557 and 558.

SC-6.06 ***Concerning Subcontractors, Suppliers, and Others***

Add the following new subparagraph immediately after subparagraph 6.06.G.2

3. Pursuant to CGS §49-41a, Contractor shall include in each of its subcontracts a provision requiring each Subcontractor to pay any amounts due any of its subcontractors, whether for labor performed or materials furnished, within thirty days after such Subcontractor receives a payment from the Contractor which encompasses labor or materials furnished by such Subcontractor.

SC-6.10 ***Taxes***

Add the following new subparagraph immediately after Paragraph 6.10.A.

1. Pursuant to 12-412 (1)(A) of the Connecticut General Statutes, materials and equipment used in the Work are exempt from State of Connecticut sales and use tax, and no amounts therefor shall be included.

Add the following new Paragraph immediately after subparagraph 6.10.A.1.

C. Except for contracts less than $250,000, Contractor and Subcontractor shall comply with the requirements of CGS §12-430(7) regarding payment of taxes by non-resident contractors. If Contractor is an "*unverified contractor*" as defined in CGS §12-430(7), provide proof that a good and valid bond with a surety company authorized to do business in the state of Connecticut in an amount equal to five per cent of the contract price, has been posted with the Commissioner of the Department of Revenue Services to secure the payment of any taxes due from the Contractor or any Subcontractor at any tier.

Where:

Unverified contractor means a nonresident contractor or subcontractor who is not a verified contractor.

Nonresident contractor means a contractor or subcontractor who does not maintain a regular place of business the state of Connecticut.

Verified contractor means a nonresident contractor or subcontractor who (I) is registered for all applicable taxes with the Department, (II) has filed all required tax returns with the Department, (III) has no outstanding tax liabilities to the Department, and (IV) is treated as a *verified contractor* by the Commissioner pursuant to subparagraph (H) of subdivision (7) and whose status as such is verified by the Commissioner pursuant to subparagraph (I) of subdivision (7)

1. Pursuant to CGS §12-430(7), if Contractor is an *unverified contractor* and doing business with a Subcontractor who is an *unverified contractor*, it shall hold back an amount equal to five per cent of such payments otherwise required to be made to such Subcontractor until such Subcontractor furnishes Contractor with a certificate of compliance, authorizing the full or partial release of the amount held back from such payments to such Subcontractor. Contractor shall provide written notice of the requirement to hold back to each Subcontractor who is an *unverified contractor* not later than the time of commencement of Work under the contract by such Subcontractor.

2. If Contractor who is an *unverified contractor* establishes, to the satisfaction of the Commissioner of the Department of Revenue Services, that Contractor has paid all of the taxes that it owes in connection with the Contract, or that its Subcontractors who are *unverified contractors* have paid all of the taxes that they owe in connection with the Contract, or Contractor has held back an amount equal to five per cent of the payments being made by Contractor to Subcontractors who are *unverified contractors*, the Commissioner may release Contractor from its obligations under the bond.

SC-6.13 ***Safety and Protection***

Add the following new Paragraphs immediately after Paragraph 6.13.F.

G. Any person required to complete a course or program under subsection (a) of CGS §31-53b who has not completed the course or program shall be subject to removal from the Work Site if the person does not provide documentation of having completed such course or program by the fifteenth day after the date the person is found to be in noncompliance. These requirements do not apply to drivers of commercial motor vehicles driving a vehicle on the Project and delivering or picking up cargo from the Project provided they perform no labor relating to the Project other than the loading and unloading of their cargo. See SC-14.02.

SC-11.01. ***Cost of the Work***

Pursuant to subparagraph 11.01.A.1.a, the Project is not subject to the prevailing wage laws under CGS §31-53(g).

Add the following new subparagraph immediately after subparagraph 11.01.A.5.d.

1) The Project is exempt from sales tax as set forth in SC-6.10.

SC-14.02. ***Progress Payments***

Add the following new subparagraph immediately after subparagraph 14.02.A.3.

3. Pursuant to CGS §31-53b, furnish proof with the weekly certified payroll form for the first week each employee begins Work on the project that any person performing the Work of a mechanic, laborer or worker pursuant to the classifications of labor under CSG §31-53 on the Project, has completed a course of at least ten hours in duration in construction safety and health approved by the federal Occupational Safety and Health Administration or, has completed a new miner training program approved by the Federal Mine Safety and Health Administration in accordance with 30 CFR 46 or, in the case of telecommunications employees, has completed at least ten hours of training in accordance with 29 CFR 1910.268, and, that any plumber or electrician subject to the continuing education requirements of section 20-334d, who has completed a course of at least ten hours in duration in construction safety and health approved by the federal Occupational Safety and Health Administration five or more years prior to the date such electrician or plumber begins Work on such public works Project, has completed a supplemental refresher training course of at least four hours in duration in construction safety and health taught by a federal Occupational Safety and Health Administration authorized trainer. Sufficient proof of compliance with the provisions of subsection (a) or (b) of CGS §31-53b includes a student course completion card issued by the federal Occupational Safety and Health Administration Training Institute, or such other proof of compliance Labor Commissioner deems appropriate, dated no earlier than five years before the commencement date of the Project or, in the case of supplemental refresher training, a student course completion card issued by said Occupational Safety and Health Administration authorized trainer dated not earlier than five years prior to the date such electrician or plumber begins Work on the Project.

4. Pursuant to CGS §49-41a, include a statement showing the status of all pending construction change orders, other pending change directives and approved changes to the Contract or any subcontract. Such statement shall identify the pending construction change orders and other pending change directives, and shall include the date such change orders and directives were initiated, the costs associated with their performance and a description of any Work completed. As used in this section, “pending construction change order” or “other pending change directive” means an authorized directive for extra Work that has been issued to a contractor or a subcontractor.

Add the following new subparagraph immediately after subparagraph 14.02.C.1.

2. Pursuant to CGS §49-41a(a), Contractor shall pay Subcontractors within 30 days of receipt of payment from Owner. This provision shall be included in any subcontract in connection with Work under the Contract Documents. Enforcement of right to payment on bond shall be in accordance with CGS §49-42.

Add the following new subparagraphs immediately after subparagraph 14.02.D.1.d.

e. Failure to comply with Laws and Regulations, including, but not limited to the following.

1) Contractor or its Subcontractors fail to pay employees wages as required by applicable Laws and Regulations

2) Contractor or its Subcontractors fail to provide certified payroll records as required by applicable Laws and Regulations

SC 14.07 ***Final Payment:*** Add the following new subparagraph immediately after Paragraph 14.07.C.1.

5. Pursuant to CGS 49-41a(a), Contractor shall pay Subcontractors within 30 days of receipt of payment from Owner. This provision shall be included in any subcontract in connection with Work under the Contract Documents. Enforcement of right to payment on bond shall be in accordance with CGS §49-42.

END OF SECTION

This page intentionally left blank

SECTION 01 11 00

SUMMARY OF WORK

PART 1 – GENERAL

1.01 SECTION INCLUDES

A. Project Description

B. Description of the Work

C. Work Sequence and Coordination

D. Special Requirements

1.02 PROJECT DESCRIPTION

A. The Site is located at 2 Westbrook Place and 1224 Boston Post Road (Route 1) in Westbrook, Connecticut and is identified as Lots 21 and 22 on Assessors Map 177. The Site abuts Knothe Road to the west, residential properties and woodlands to the north, New Haven Savings Bank to the east and Boston Post Road to the south. The Site is approximately 0.48 acres in size.

B. The Site is presently vacant and consists of a gravel parking area, grass and woodlands. The Town Center Brook is conveyed through the Site via open channel flow and is conveyed beneath Route 1 via a 30-inch diameter CMP culvert starting at the southeastern corner of the Site. In general, grades on Site slope in an easterly direction towards the Town Center Brook. Stormwater runoff from the Site under existing conditions discharges via overland flow to the Town Center Brook and ultimately drains to the Westbrook Harbor.

C. The proposed redevelopment of the Site consists of clearing portions of the Site to be developed, construction of permeable pavement access drives and parking, landscaped areas and a Stormwater Management System (the System). The System will consist of catchbasins with oil/water separators on the outlet pipes, conveyance pipe, precast concrete culvert and permeable pavement for water quality, groundwater recharge and peak flow attenuation.

1.03 DESCRIPTION OF THE WORK

A. The Work includes labor, material and equipment, services required for construction, testing, and commissioning of the Project in accordance with the Contract Documents and as more specifically described in the Specifications and Drawings and includes, but is not limited to, the following principal features:

1. Site Preparation and demolition of select Site features

2. Installation & maintenance of environmental protection controls
3. Clearing, grubbing, tree stump removal & disposal, as necessary
4. Concrete culvert, headwall and wingwall installation
5. Precast concrete transition structure installation
6. Catch basin and piping installation
7. Earth moving, excavation, backfill and soil compaction activities
8. Permanent erosion control installation
9. Roadway construction
10. Curb installation
11. Parking lot construction
12. Grading
13. Guard rail installation
14. Striping
15. Loam and seed
16. Lighting
17. Electrical Service
18. Water Service

B. Work Site locations: generally as shown on the Drawings.

1.04 WORK SEQUENCE AND COORDINATION

A. Work shall be performed from 7:00 AM to 5:00 PM, Monday through Friday, excluding holidays unless otherwise approved by the Owner.

B. Coordinate all work with the Town of Westbrook Land Use Office, Department of Public Works Police Department for traffic control and Engineer.

1.05 SPECIAL PROJECT REQUIREMENTS

A. N/A

PART 2 PRODUCTS - NOT USED

PART 3 EXECUTION - NOT USED

END OF SECTION

SECTION 01 15 00

SPECIFIC PROJECT REQUIREMENTS AND PROCEDURES

The following supplement the requirements and procedures of Sections 01 15 30, 01 50 00, 01 60 00, and 01 70 00 using the same titles, headings, and paragraph numbers to which the supplement applies.

Certain provisions required by Laws and Regulations may be referenced. Contractor is responsible to determine and obtain applicable Laws and Regulations and to review and interpret the full text of such Laws and Regulations.

SECTION 01 15 30 - PAYMENT AND ADMINISTRATIVE PROCEDURES AND QUALITY REQUIREMENTS

1.02 PAYMENT PROCEDURES

Pursuant to Paragraph B. **Payment Procedures**, submit the following specific items.

- Copy of cashed check paid and copy of receipts for Traffic Police Details invoices paid showing: the Project name; the officers' names; location of assignment; date of assignment; hours of assignment; and number of hours being invoiced.

1.03 ADMINISTRATIVE REQUIREMENTS

Pursuant to Paragraph A. **Project Management and Coordination; Meetings**,

subparagraph 1., **the Project contact list** is included below.

Land Use Office
Mulvey Municipal Center
866 Boston Post Road
Westbrook, Connecticut 06498
Attn: Meg Parulis, Town Planner
Phone: (860) 399-3046 ext. 1126
Email: mparulis@westbrookct.us

subparagraph 4, **identify documents** and items for the Project as follows.

Town Center Parking Improvement Project

Pursuant to Paragraph C. **Submittal Procedures**, subparagraph 1., address submittals as follows.

Engineer:
Woodard & Curran
33 Broad Street, Floor 7

Providence, RI 02903
Attn: Paul Jacques, P.E.
Phone: (401) 484-6129
Email: pjacques@woodardcurran.com

Owner:
Town of Westbrook, Connecticut
Mulvey Municipal Center
866 Boston Post Road
Westbrook, Connecticut 06498
Attn: Meg Parulis
Phone: (860) 399-3046 ext.1126
Email: mparulis@westbrookct.us

1.04 QUALITY REQUIREMENTS

Pursuant to Paragraph A. **Reference Standards and Regulatory Requirements**, specific requirements applicable to the Project include the following.

- Comply with the Connecticut Department of Transportation (CTDOT) Form 816 Specifications for Roads, Bridges, and Incidental Construction (including Interim Supplemental Specifications and Supplemental Specifications but not including Compensation sections), Construction Details (including Standard Drawings), and Design Guides as incorporated into the Specifications and Drawings, and as may be modified therein or superseded by the Owner's requirements through the direction of the Engineer.
- Specific sections of the CTDOT documents are referenced in the Specifications and Drawings. References to "Department" in the CTDOT documents shall mean Owner or Resident Project Representative for this Project.

Pursuant to Paragraph B. **Qualifications**, additional requirements include the following specialty experience.

- Regular and active engagement in the drainage, sewer and water infrastructure construction business for a minimum of 10 years' experience and having successfully installed a similar pre-cast boxed culvert of this size on at least 3 projects in Connecticut.
- Minimum 10 years' experience in design and installation of excavation bracing and shoring systems.
- Regular engagement of experienced engineers/design professionals and land surveyors licensed in Connecticut performing other work similar to that specified.

SECTION 01 50 00 – TEMPORARY FACILITIES AND CONTROLS

1.04 TEMPORARY CONTROLS

Pursuant to Paragraph B. **Water Control and Dewatering**, comply with the following additional requirements.

- CTDEEP requirements
- CTDOT requirements within State rights of way

Pursuant to Paragraph C. **Erosion and Sediment Control**, comply with the following additional requirements.

- CTDEEP requirements
- CTDOT requirements within State rights of way

Pursuant to Paragraph F. **Traffic Regulation**,

subparagraph 1. regarding a **plan for traffic control**, also submit a schedule of road closures/detours and obtain a road closure and road blockage permit for every location where Work is being performed. Detours and street closures are subject to the approval of the Owner who will strictly control the periods when traffic is being detoured or streets can be closed.

subparagraph 4. regarding **use of police officers**, comply with the following additional requirements.

- Coordinate schedule of police details with Owner which will be direct billed to the Owner.

subparagraph 5, regarding **maintaining one moving lane**, comply with the following additional requirements.

- Except when road closure and road blockage permits are obtained, maintain two lanes of traffic (one in each direction) on Route 153 throughout construction and during non-working hours to the maximum extent possible.
- Lane closures will not be permitted from 5:00 am to 9:00 am and 3:00 pm to 8:00 pm except when road closure and road blockage permits are obtained.

SECTION 01 70 00 - EXECUTION AND CLOSEOUT REQUIREMENTS

1.02 OVERALL EXECUTION REQUIREMENTS

Pursuant to Paragraph A. **Coordination**,

- Coordinate with Owner and Engineer prior to performing any Work that will impact the sewer system, water system or other utilities.
- Coordinate with the Conservation Commission prior to start of Work.

subparagraph 4. **regarding space requirements**, a primary Site restriction is the width of the streets and volume of traffic within the Project Site which may require complete shut down or partial blocking of the streets during construction. Coordinate with the Fire Department and Police Department.

Pursuant to Paragraph B. **Existing Conditions**,

subparagraph 1. regarding **availability of lands**, access to be provided where needed. The Owner will assist Contractor with coordination.

subparagraph 3. regarding **underground utilities**, comply with the following additional requirements.

- Contact Call Before You Dig (http://www.cbyd.com/) by dialing 811.

subparagraph 4. regarding **reference points**, survey information is included on the Drawings.

END OF SECTION

SECTION 01 15 30

PAYMENT AND ADMINISTRATIVE PROCEDURES AND QUALITY REQUIREMENTS

PART 1 – GENERAL

1.01 SUMMARY

A. This Section specifies administrative and procedural requirements relating to payment, the process of contract administration, and the methods of communicating, controlling, and assuring quality, and applies to all Specifications and Drawings.

1. In certain Paragraphs, checked items indicate those requirements applicable to the Project.

2. Provisions of this Section may be supplemented in the **Specific Project Requirements and Procedures** or other sections of Division 01.

B. Section Includes

1.02 PAYMENT PROCEDURES
Schedule of Values
Payment Procedures
Change Procedures
Measurement and Payment Procedures
Correlation of Submittals

1.03 ADMINISTRATIVE REQUIREMENTS
Project Management and Coordination; Meetings
Documentation of Progress
Submittal Procedures
Closeout Procedures

1.04 QUALITY REQUIREMENTS
Reference Standards and Regulatory Requirements
Qualifications

1.05 ATTACHMENTS

1.02 PAYMENT PROCEDURES

A. **Schedule of Values**: in accordance with Article 2 of the Standard General and Supplementary Conditions, if any.

1. Provide sufficient detail to allow for determination of the value of the Work at any degree of completion.

   ☐ For each line item, identify number and title of Specification section in accordance with the Table of Contents.

☐ See **Specific Project Requirements and Procedures** for additional requirements.

Number of hardcopies: 10

Submit electronically: ☒ by email ☐ on CD
☒ via digital document exchange system in PDF format

B. **Payment Procedures:** in accordance with Article 14 of Standard General and Supplementary Conditions, if any.

1. Submit Application for Payment using the form included in the Project Forms section. Utilize latest approved Schedule of Values for listing items in Application for Payment. Provide supporting documentation for items included in the Application for Payment.

   Number of hardcopies: 10

   Submit electronically: ☒ by email ☐ on CD
   ☒ via digital document exchange system in PDF format

2. Payment Period: at intervals stipulated in the Agreement.

3. Submit an updated Progress Schedule with each Application for Payment.

☒ See **Specific Project Requirements and Procedures** for additional requirements.

C. **Change Procedures**: in accordance with Articles 10 and 12 of Standard General and Supplementary Conditions, if any, utilizing forms included in Section 00 60 00 Project Forms.

Number of hardcopies: 10 of each type of form and accompanying documentation.

Submit electronically: ☒ by email ☐ on CD
☒ via digital document exchange system in PDF format

☐ See **Specific Project Requirements and Procedures** for additional requirements.

1. Field Order: as authorized by Paragraph 9.04 of the Standard General and Supplementary Conditions, if any.

2. Change Request: issued by Engineer, Owner or Contractor to request or authorize minor variations and deviations, amendments or supplements to the Contract Documents. Initiate requests for substitute items per Paragraph 6.05 of the Standard General and Supplementary Conditions, if any, using a Change Request.

   a. Engineer or Owner to include a detailed description of a proposed change with supplementary or revised Drawings and Specifications, including a change in Contract Times related to the change (with a stipulation for any overtime work required) and the period of time during which the requested price (if any) will be considered valid. Prepare and submit an estimate within 15 days.

   b. Describe the proposed change and its full effect on the Work. Describe the reason for the change and the effect on the Contract Price and Contract Time with full documentation (and a statement describing the effect on Work by separate or other contractors).

3. Work Change Directive: as defined in Paragraph 1.01.A.51 of the Standard General and Supplementary Conditions, if any.

4. Change Order: in accordance with Articles 10 and 12 of the Standard General and Supplementary Conditions, if any.

   a. *Stipulated Price Change Order*: based on Contractor's maximum price quotation or Contractor's request for a Change Order as approved by Engineer or Owner.

b. *Unit Price Change Order*: for pre-determined unit prices and quantities and executed on a fixed unit price basis. Execute Work under a Work Change Directive for unit costs or quantities of Work not pre-determined. Changes in Contract Price and Contract Time to be computed as specified for Time and Material Change Order.

c. *Time and Material Change Order*: based on itemized account and supporting data after completion of change within time limits indicated in the Standard General and Supplementary Conditions, if any. Engineer or Owner and Contractor to determine the change allowable in Contract Price and Contract Time as provided in the Standard General and Supplementary Conditions, if any. Maintain detailed records of Work completed on this basis, provide provide full information for evaluation of proposed changes, and substantiate costs for changes in the Work.

5. "Or Equals" and Substitutes: Request "Or-Equal" and substitute items items as a Change Request per subparagraph 1.02.C.2 above, with complete data substantiating compliance with Contract Documents.

a. Or-Equal" and substitute items will be processed in accordance with Paragraph 6.05 of the Standard General and Supplementary Conditions, if any, and subparagraph 1.03.C.6 below.

D. **Measurement and Payment Procedures**

1. Payment includes full compensation for required labor, material and equipment, tools, plant, transportation, services and incidentals; erection, application or installation and construction of an item of the Work; and overhead and profit, unless otherwise indicated.

☒ See Section 01 20 25 Measurement and Payment

☐ See **Specific Project Requirements and Procedures** for additional requirements.

E. Correlation of Submittals

1. Promptly revise Schedule of Values and Applications for Payment to record each authorized Change Order as a separate line item and adjust the Contract Price.

2. Promptly revise Progress Schedule to reflect any change in Contract Times and revise sub-schedules to adjust time for other items of the Work affected by the change.

3. Promptly enter changes in Project Record Documents.

1.03 ADMINISTRATIVE REQUIREMENTS

A. Project Management and Coordination; Meetings

1. Contact information for Owner and other entities related to the Project and special coordination requirements and contacts during prosecution of the Work **are included in the Specific Project Requirements and Procedures.**

2. Inform Owner and Engineer of the address for sending official correspondence and the address and telephone number of Contractor's representative who will be project manager and Site superintendent for the Contract.

3. During periods of construction and testing keep Owner and Engineer informed in writing with name, address, and telephone number of Contractor's representative who will be responsible and available outside of normal working hours for emergency repairs and the maintenance of safety devices.

   ☒ Identify the 24 hour, 7 days per week emergency response telephone or cell phone number that is staffed by a person (not a passive answering machine) or provide that a phone call will be returned within one hour.

4. Identify correspondence, submittals, drawings, data and materials, packing slips or other items associated with this Contract as specified in the **Specific Project Requirements and Procedures**.

5. Coordinate scheduling, submittals, and Work of the various Specifications to effectuate an efficient and orderly sequence for installing interdependent construction elements, with provisions for accommodating items installed later.

6. Preconstruction Conference and Site Mobilization Meeting

   a. Owner to schedule an initial preconstruction conference in accordance with Paragraph 2.06 of the Standard General and Supplementary Conditions, if any.

   b. Attendance required by Owner, Contractor, Engineer, Contractor's Superintendent, Project Manager, and Subcontractors as a minimum.

c. Sample Agenda

- Distribute Contract Documents
- Discuss design concepts
- Discuss preliminary Progress Schedule, Schedule of Submittals, Schedule of Values and preliminary cash flow projections.
- Designate personnel representing each party; communication procedures
- Procedures and processing of submittals, substitutions, applications for payments, Change Orders and Contract closeout procedures
- Scheduling
- Use of premises by Owner and Contractor
- Owner's requirements and partial occupancy
- Construction facilities and controls provided by Owner
- Temporary utilities provided by Owner and Contractor
- Survey and Site Layout
- Security and housekeeping procedures
- Schedules
- Procedures for testing
- Procedures for maintaining record documents
- Requirements for start-up
- Inspection and acceptance of equipment put into service during construction period
- Access, laydown and coordination with others

d. Engineer will record minutes and distribute draft copies promptly after meeting to Owner and Contractor for review, then revise as required and distribute thereafter to meeting participants, with copies to Owner and Contractor, and those affected by decisions made.

7. Progress Meetings

a. Owner to schedule progress meetings beginning no later than 60 days after the Initial Conference and continue thereafter on a **weekly** basis throughout progress of the Work.

b. Attendance required by Contractor, Contractor's Superintendent, major Subcontractors and Suppliers, Owner and Engineer as appropriate to agenda topics for each meeting.

c. Sample Agenda

- Review minutes of previous meetings – unresolved issues
- Overall project status
- Work Completed
- Anticipated Work
- Schedule
- Pay Applications
- Change Orders
- Submittals
- Observations, problems, and decisions
- General Discussion/Comments
- Action Items
- Date and time for next meeting

d. Engineer will record minutes and distribute draft copies promptly after meeting to Owner and Contractor for review, then revise as required and distribute thereafter to meeting participants, with copies to Owner and Contractor, and those affected by decisions made.

8. Pre-installation Conference and Coordination Meetings

a. When required, convene a pre-installation conference at Site before commencing certain Work that requires coordination or has special requirements or approval.

b. Convene coordination meetings as may be generally required.

c. Attendance required by parties directly affecting, or affected by, Work of the specific Specification section.

1) For pre-installation conference, notify Owner and Engineer 5 days in advance.

2) For coordination meetings, party requesting coordination meeting to notify other party(s).

d. Review conditions, preparation and procedures, and coordination with related Work.

B. **Documentation of Progress**

1. Submit preliminary and final Progress Schedules as specified in Paragraphs 2.05 and 2.07 of the Standard General and Supplementary Conditions, if any, or as established in Notice to Proceed.

   Number of hardcopies: **10**

   Submit electronically: ☒ by email ☐ on CD
   ☒ via digital document exchange system in PDF format

   a. Show complete sequence of construction by activity, identifying Work of separate stages and other logically grouped activities. Indicate the early and late start, early and late finish, float dates, and duration.

   b. Indicate estimated percentage of completion for each item of Work at each submission.

   c. Indicate dates for fabrication, factory testing, delivery, shipping and field testing, and material and equipment delivery dates, including those furnished by Owner. Coordinate with Schedule of Submittals.

2. Submit revised Progress Schedule on monthly basis and with each Application for Payment, identifying changes since previous version. Coordinate content with Schedule of Values, if any.

3. Documentation of pre-construction conditions, construction progress, and final conditions:

   ☐ Not Required for the Project

   ☒ Construction Photographs: to record Site conditions. Ensure existing conditions of roadway surfaces, curbing, berms, sidewalks, driveways, property bounds, landscaped areas, abutters property and any other items that might be affected by the Work are clearly recorded.

   ☒ Submit prior to starting construction.

   ☒ Submit photographs with Payment Application:
   ☐ monthly during progress of Work.
   ☒ for final payment to record final condition.

Construction photographs: electronic in PDF or JPG format, minimum 300 dpi quality and a minimum resolution of 6.0 megapixels. Identify photographs with date, time, orientation and Project identification.

Number of copies: 10 on 8-1/2 by 11 sheets.

Submit electronically: ☒ by email ☐ on CD
☒ via digital document exchange system

☒ Digital Video Recording: Video record, in color, all areas of the Project Site. Ensure existing conditions of roadway surfaces, curbing, berms, sidewalks, driveways, property bounds, landscaped areas, abutters' property and any other items that might be affected by the Work are clearly recorded.

☒ Submit prior to the starting construction.
☐ Submit at completion of construction.

Arrange for video recordings to be conducted by a professional videographer in digital videodisc (DVD) format. Include clear and concise audio descriptions of the existing Project Site conditions.

Submit 1 copy of the first completed video recording to the Engineer for review of visual and audio quality. Re-record any recording furnished which, in the opinion of the Engineer, are poor quality or incomplete at no additional cost to Owner. Submit 2 copies of approved videos.

4. Reports

a. Submit weekly Safety Reports signed by the Safety Representative.

b. Other reports to be submitted:
☒ None
☐ Specified in **Specific Project Requirements and Procedures**

Number of hardcopies: Click & enter #.

Submit electronically: ☐ by email ☐ on CD
☐ via digital document exchange system in PDF format

C. **Submittal Procedures**

1. Schedule submittals to expedite the Project and coordinate with schedules required by Paragraph 1.03.B above. Deliver each submittal in the quantity and electronic form indicated to Engineer (with copy to Owner where required) at the addresses specified **in the Specific Project Requirements and Procedures**. Coordinate submission of related items.

2. Present submittals in a clear and thorough manner, in English and using English units. Provide space for Contractor, Engineer, and Owner's review stamps. Use sheet size of not less than 8 1/2 by 11 inches and not more than 24 by 36 inches.

3. Revise and resubmit documents as required. Identify all changes made since previous submittal. Distribute copies of reviewed submittals to concerned parties. Instruct parties to promptly report any inability to comply with provisions. Submittals not requested on the submittal schedule may not be recognized or processed.

4. Submit preliminary and final Schedule of Submittals as specified in Article 2 of the Standard General and Supplementary Conditions, if any, or as established in Notice to Proceed. Include all submittals specified in the Standard General and Supplementary Conditions, if any, General Requirements, and other Specification sections.

   Number of hardcopies: **10**

   Submit electronically: ☒ by email ☐ on CD
   ☒ via digital document exchange system in PDF format

   a. Include description of each submittal, date by which each submittal will be delivered to Engineer and Owner date by which each submittal must be approved to maintain project schedule, and relevant section reference.

   b. Allow 15-30 days from receipt of submittal/resubmittal for Engineer review of submittals and possible resubmittal.

5. Shop Drawings and Samples: Submit in accordance with Paragraph 6.17 of the Standard General and Supplementary Conditions, if any, and as follows, and coordinate with the Schedule of Submittals required in subparagraph 4 above.

Number of prints: **10**

Electronic format: ☒ PDF ☒ DWG ☒ DXF
☐ OTHER (as specified in **Specific Project Requirements and Procedures**)

Submit electronically: ☒ by email ☒ on CD
☒ via digital document exchange system

a. Complete the submittal transmittal form included as an attachment to this Section as is indicated, numbering each submittal consecutively. Assign resubmittals the same transmittal number as the original with a suffix of a sequential letter to indicate the resubmittal (e.g. the first resubmittal of submittal 25 would be number 25A.) Include only those documents previously issued under original transmittal number in resubmittals. Do not combine new submittals with resubmittals.

b. Attach a transmittal form to each group of Shop Drawings, manufacturer's literature, equipment data and Samples submitted. Use a sufficient number of transmittal forms so that: items on a single transmittal form pertain to the same equipment item, Specification section or element of Work; items on a single transmittal form are either original submittals or the same number resubmittal; and each Sample is listed on a separate transmittal form.

c. Engineer to complete review in accordance with Paragraph 6.17.D. of the Standard General and Supplementary Conditions, if any.

d. Submittals which do not have a fully completed transmittal form will be returned along with unreviewed attachments. Returned submittals, even though incomplete, will be counted as a submittal.

e. Contractor shall reimburse Owner for Engineer's time for resubmittals per Paragraph 6.17.E. of the Standard General and Supplementary Conditions.

f. Submission of any Shop Drawing or Sample bearing Contractor's and Engineer's approval shall constitute a representation to Owner that the requirements of Paragraph 6.17 of the Standard General and Supplementary Conditions, if any, have been fulfilled.

6. Variations: Identify variations from Contract Documents and material and equipment or system limitations which may be detrimental to successful performance of the completed Work and identify reasons therefor in accordance with subparagraph 6.17.C.3 of the Standard General and Supplementary Conditions, if any.

   a. Clearly identify requests for "Or-Equal" and substitute items and submit per Paragraph 6.05 of Standard General and Supplementary Conditions, if any, and subparagraph 1.02.C.5 above. Substitute items will not be considered when indicated or implied on Shop Drawing or material and equipment data submittals without separate written request, or when acceptance will require revision to the Contract Documents.

7. Manufacturers' Installation Instructions and Certificates: Submit printed instructions for delivery, storage, assembly, installation, start-up, adjusting, and finishing.

   Number of prints: **10**

   Electronic format: ☒ PDF ☐ DWG ☐ DXF
   ☐ OTHER (as specified in **Specific Project Requirements and Procedures**)

   Submit electronically: ☒ by email ☐ on CD
   ☐ via digital document exchange system

   a. Indicate special procedures, perimeter conditions requiring special attention and special environmental criteria required for application or installation.

   b. Submit manufacturers' certificates for recent or previous test results on material or equipment, but they must be acceptable to Engineer and Owner. Indicate material or equipment conforms to or exceeds specified requirements and provide supporting reference date, affidavits, and certifications as appropriate.

   c. Submit test results, data, and reports and certifications to Engineer based on tests performed. Submit test reports and certifications for independent testing services specified.

8. Record Documents and Closeout Submittals: submit in accordance with Paragraph 6.12 of the Standard General and Supplementary Conditions, if any, and Paragraph 1.03.D below.

   a. *As-Builts for Material and Equipment*

      Number of prints: **10**

      Electronic format: ☒ PDF ☒ DWG ☐ DXF
      ☐ OTHER (as specified in **Specific Project Requirements and Procedures**)

      Submit electronically: ☒ by email ☒ on CD
      ☐ via digital document exchange system

      Indicate "As-Supplied" in revision block and sign. Show all changes and revisions to Final Completion per **Execution and Closeout Requirements**.

   b. *Conformed to Construction Record Drawings*: Submit for Engineer's use in preparing final Record Drawings.

      Number of prints: **10**

      Electronic format: ☒ PDF ☒ DWG ☐ DXF
      ☐ OTHER (as specified in **Specific Project Requirements and Procedures**)

      Submit electronically: ☒ by email ☐ on CD
      ☐ via digital document exchange system

      Indicate "Conformed by Contractor to Construction Records" in revision block and sign. Show all changes and revisions to Final Completion per **Execution and Closeout Requirements.**

   c. *Warranties and Guarantees*: Submit duplicate notarized copies of warranty documents which are executed and transferable from Subcontractors, Suppliers, and manufacturers. For items of Work delayed beyond date of Substantial Completion, provide updated submittal within 10 days after acceptance, listing date of acceptance as start of Warranty Period.

      In PDF format: ☒ on CD
      ☐ via digital document exchange system

      ☒ Submit 2 copies in ring binders with durable plastic covers and table of contents.

d. *Operation and Maintenance Data*

1) Submit draft of completed volumes 30 days prior to equipment startup. Revise content of all sets as required prior to final submission.

Number of hardcopies: **10**

Submit electronically: ☒ by email ☐ on CD
☒ via digital document exchange system in PDF format

2) Submit final volumes within 10 days after final inspection.

Submit electronically: ☒ by email ☐ on CD
☒ via digital document exchange system in PDF format

☒ Submit 2 copies of data in ring binders with durable plastic covers with 8 1/2 by 11 inch text pages. Cover: title "OPERATION AND MAINTENANCE INSTRUCTIONS", title of Project, and subject matter of binder when multiple binders are required.

a) Subdivide binder contents with permanent page dividers, logically organized as described below with laminated plastic tabs and clearly print the contents. Prepare a Table of Contents for each volume, with material, equipment, or system description identified, in three parts as follows.

Part 1: Directory, listing names, addresses, and telephone numbers of Contractor, Subcontractors, and major equipment Suppliers, and service representative.

Part 2: Operation and maintenance instructions arranged by system and subdivided by Specification section.

For each system, identify names, addresses, and telephone numbers of Subcontractors and Suppliers. Identify the following:

- Significant design criteria
- List of equipment with As-Builts certified "As-Supplied"
- Parts list for each component
- Operating instructions
- Inspection, maintenance and adjustment instructions for equipment and systems
- Lubrication and maintenance schedules
- Maintenance instructions for special finishes, including recommended cleaning methods and materials, and special precautions identifying detrimental agents
- Troubleshooting guides
- Schematic diagrams

Part 3: Material Safety Data Sheets

Part 4: Other Project documents and certificates, including the following:

- Certificates
- Photocopies of warranties

☒ See **Specific Project Requirements and Procedures** for additional requirements.

D. **Closeout Procedures**

1. Substantial Completion shall have been achieved when the following has been completed and the requirements of Paragraph 14.04 of the Standard General and Supplementary Conditions, if any, have been met.

   a. Work is complete, systems are successfully operating, and final testing has been successfully completed.

b. A full inventory of the spare parts and special tools purchased by the Owner are replenished and in the custody of the Owner.

c. The Site has been restored to the satisfaction of the Owner.

d. An inspection of the Work has been completed by the Engineer and the Owner.

e. An updated Punch List is provided.

f. The Contractor's written warranty and guarantee has been submitted as required by Paragraph 16.19.D. of the Standard General and Supplementary Conditions, if any.

g. A Certificate of Substantial Completion has been provided in accordance with Paragraph 14.04.C. of the Standard General and Supplementary Conditions, if any.

2. The Contractor shall have sole care, custody, and control of the Work until achievement of Substantial Completion. During the period between Substantial Completion and the date for Final Completion, Contractor shall be given access to correct items on the Punch List and achieve Final Completion.

3. The date of achieving Substantial Completion is the date set forth in the Certificate of Substantial Completion that is accepted and signed by the Owner.

4. Final Completion shall have been achieved when the Work is complete, the requirements of Paragraphs 14.06 and 14.07 of the Standard General and Supplementary Conditions, if any, have been met, and when the following is complete.

a. Substantial Completion has been achieved and liquidated damages for failure to meet Substantial Completion Date have been paid.

b. All Work including Punch List Items has been completed.

c. Final cleaning has been conducted and Contractor equipment and supplies including waste materials have been removed from the Site and legally disposed of.

d. A full set of record documents have been submitted as specified in subparagraph 1.03.C.8 above and Contractor's written warranty and guarantee has been resubmitted if adjusted.

e. Inspections required by Laws and Regulations are complete. Certificates and permits to occupy and operate have been issued if required.

f. Spare parts, maintenance and extra materials have been delivered in quantities specified to Project Site and stored as directed.

g. A request for final inspection in accordance with Paragraph 14.06 of the Standard General and Supplementary Conditions, if any, has been submitted to the Engineer and the inspection has been completed and the results accepted by the Owner.

h. A Final Application for Payment has been submitted to the Engineer identifying total adjusted Contract Price, previous payments, and balance due along with required documentation in accordance with Paragraph 14.07.A. of the Standard General and Supplementary Conditions, if any.

1.04 QUALITY REQUIREMENTS

A. Reference Standards and Regulatory Requirements

1. Reference to standards, specifications, manuals or codes of any technical society, organization or association, or Laws or Regulations of any governmental authority are used in accordance with Paragraph 3.02 of the Standard General and Supplementary Conditions, if any.

2. Acronyms and abbreviations used are defined in the applicable versions of the Encyclopedia of Associations published by Gale (part of Cengage Learning) generally available in large libraries and on the internet.

☒ See **Specific Project Requirements and Procedures** for additional requirements.

B. Qualifications

1. Meet or provide capability to meet the criteria specified in individual Specification sections in connection with various portions of the Work of the Contract Documents .

2. As a minimum, Contractor shall:

a. have been regularly and actively engaged in similar Work as described in the Contract Documents, operating under the same business name and business organization structure, for the last 5 years on at least 5 projects;

b. have successfully completed at least 3 projects involving construction of similar facilities in the same state as the Project covered by the Contract Documents;

c. have a full-time project manager in responsible charge of the Work with at least 10 years' experience as project manager on comparable projects; and

d. carry at least the insurance coverage and amounts required in Article 5 of the Standard General and Supplementary Conditions, if any.

☒ See **Specific Project Requirements and Procedures** for additional requirements.

1.05 ATTACHMENTS

A. Transmittal form

END OF SECTION

TRANSMITTAL FORM

Owner:		Transmittal No.:	
Project:		Date:	
Contract No.:			
Contract Title:			
Specification Section No.:			

Assign a consecutive, unique number to each submittal and use same on resubmittals. Example: 25 =original submittal; 25A = 1st resubmittal; 25B (and beyond) = additional resubmittals

Submittal (Item) No.	Resubmittal (A B C etc.)	Date	Title/Description	Vendor/Manufacturer	Copies

☐ The material and equipment, and requirements for construction/installation contained in Submittal No.(s) _____ have been reviewed and we certify that they are correct and in strict conformance with the requirements specified (no exceptions or deviations)

☐ The material and equipment and requirements for construction/installation contained in Submittal No.(s) _____ have been reviewed and we certify that they are correct and in strict conformance with the requirements specified except for the following deviations (list below or attach listing):

_____

_____

CONTRACTOR'S NAME_____

ADDRESS_____

BY: _____ DATE: _____

ATTACHMENT 011530A

This page intentionally left blank

SECTION 01 20 25

MEASUREMENT AND PAYMENT

PART 1 - GENERAL

1.01 DESCRIPTION

A. This Section describes the measurement and payment for the Work to be completed under each item in Section 00 43 22 Unit Prices Form.

B. Payment procedures are in accordance with the Agreement.

C. Measurement: as determined, verified, or approved by Engineer or Owner in accordance with the General Requirements, except as otherwise specified.

D. The Work described in each pay item shall be as described in the Specifications and shown on the Drawings and not included in other pay items.

E. The Work described in each pay item shall be as described in the Specifications and shown on the Drawings and not included in other pay items.

1. Pay item descriptions are general and may not specifically describe all associated Work or elements thereof, do not constitute Specifications, and do not supersede the content of the Specifications and Drawings.

2. Review the Specifications and Drawings for Work associated with each pay item. Claims for being unfamiliar with the content of the Specifications and Drawings will not be considered.

F. The following Work is not specifically described or designated as a pay item, is considered <u>incidental to all pay items</u>, and shall not be measured separately for payment.

1. Division 01 General Requirements including Mobilization/Demobilization.

2. Materials, equipment, and services necessary to verify existing field conditions and the location, size, type, material, and orientation of existing pipes and utilities shown on the Drawings, excluding test pits.

3. Restoration of all areas disturbed by the Contractor within the limits of Work.

4. Field and laboratory testing and reporting by independent laboratory, including but not limited to compaction of backfill materials; aggregate gradation; and concrete testing

G. Payment will not be made for restoration of areas disturbed by the Contractor <u>outside</u> the limits of Work.

H. Design, installation and removal of excavation support systems, temporary and permanent utility/structure support systems associated with a pay item shall be considered incidental to that pay item.

I. Additional dewatering and erosion control (including installation, operation, maintenance, removal and off Site disposal of erosion control devices) associated with a pay item shall be considered incidental to that pay item.

1.02 MEASUREMENT AND PAYMENT BASIS

Item 1 –Remove and Dispose SNET Pole	
Measurement	Actual SNET pole removed and relocated
Payment	Unit price per each
Schedule of Payment	Completion of Work - 100%
Includes all labor, services, materials, handling, transportation, tools and equipment to remove and dispose SNET pole and all appurtenances at the location indicated on the Drawings and all other Work incidental to the satisfactory completion of the Work.	

Item 2 –Remove and Relocate Mailboxes	
Measurement	Actual mailbox removed and relocated.
Payment	Unit price per each mailbox removed & relocated
Schedule of Payment	Completion of Work - 100%
Includes all labor, services, materials, handling, transportation, tools and equipment to remove and relocate existing mailboxes and protection of adjacent surface features at the locations and limits indicated on the Drawings and all other Work incidental to the satisfactory completion of the Work. This includes all Work necessary for temporary and permanent relocation.	

Item 3, 1a – Clearing, Grubbing and Surface Feature Removal	
Measurement	Per square yard measured in place
Payment	Unit price per square yard
Schedule of Payment	Completion of Work - 100%
Includes all labor, services, materials, handling, transportation, tools and equipment to remove and dispose of all trees, shrubs and topsoil, and raze all surface features within limits defined on the plans necessary for proposed work, including, but not limited to the existing concrete pad and all other Work incidental to the satisfactory completion of the Work.	

Item 4, 1b – Remove and Relocate Signs and Posts	
Measurement	Actual signs removed and relocated.
Payment	Unit price per each
Schedule of Payment	Completion of Work - 100%
Includes all labor, services, materials, handling, transportation, tools and equipment to remove and relocate existing signs, posts, foundations and all appurtenances at the locations indicated on the Drawings and all other Work incidental to the satisfactory completion of the Work.	

Item 5 – 15-inch Class IV RCP Pipe	
Measurement	Along the horizontal projection of the centerline of the pipe; measured from inside face of stormwater structure
Payment	Unit price per linear foot
Schedule of Payment	Completion of Work and successfully pass testing - 100%
Includes all labor, services, materials, handling, transportation, tools and equipment to provide and install: the drain pipe; pipe connections; rubber sleeve connections; mortar sealing of pipe and structure; unclassified excavation; shoring and bracing; dewatering; provision, installation and compaction of backfill and bedding soils; geotextile fabric; material testing; removal and off-Site disposal of unsuitable excess soil materials as necessary and all other Work incidental to the satisfactory completion of the Work.	

Item 6 – 4-ft Diameter Catch Basin with Frame and Grate	
Measurement	Actual catch basin and grate furnished and installed
Payment	Unit price per each
Schedule of Payment	Completion of Work - 100%
Includes all labor, services, materials, handling, transportation, tools and equipment to provide and install: drainage structures regardless of depth including; Frame and grate; pipe connections; joint sealant, excavation, shoring and bracing; dewatering; provision, installation and compaction of backfill and bedding soils; geotextile fabric; material testing; provision & installation of brick invert; removal and off-Site disposal of unsuitable excess soil materials as necessary and all other Work incidental to the satisfactory completion of the Work.	

Item 7 – 8'x8' Transition Structure with Frame and Cover	
Measurement	Actual transition structure furnished and installed
Payment	Unit price per each
Schedule of Payment	Completion of Work - 100%
Includes all labor, services, materials, handling, transportation, tools and equipment to provide and install: transition structure regardless of depth including; pipe connections and couplings; joint sealant,frame and cover, excavation, shoring and bracing; dewatering; provision, installation and compaction of backfill and bedding soils; geotextile fabric; material testing; provision & installation of brick invert; removal and off-Site disposal of old pipe and unsuitable excess soil materials as necessary and all other Work incidental to the satisfactory completion of the Work.	

Item 8 – 24"x78" Precast Concrete Box Culvert	
Measurement	Actual culvert installed
Payment	Unit price per linear foot
Schedule of Payment	Work completed - 100%
Includes all labor, services, materials, handling, transportation, tools and equipment to provide and install: precast concrete culvert, preparation of subgrade; excavation and legal disposal of unsuitable or excess material; provision, installation and compaction of backfill and bedding soils; removal and off-Site disposal of unsuitable excess soil materials, and all other Work incidental to the satisfactory completion of the Work.	

Item 9 – Headwall	
Measurement	Actual headwall installed
Payment	Unit price per each
Schedule of Payment	Work completed - 100%
Includes all labor, services, materials, handling, transportation, tools and equipment to provide and install: precast concrete headwall and wingwalls as indicated on the Drawings; preparation of subgrade; excavation and legal disposal of unsuitable or excess material; provision, installation and compaction of backfill and bedding soils; removal and off-Site disposal of unsuitable excess soil materials; proper connection to precast concrete box culvert, and all other Work incidental to the satisfactory completion of the Work.	

Item 10 –Precast Concrete Curb	
Measurement	Actual length of precast concrete curbing installed
Payment	Unit price per linear foot
Schedule of Payment	Completion of Work – 100%
Includes all labor, services, materials, handling, transportation, tools and equipment to provide and install pre-cast concrete curbs at the locations and limits indicated on the Drawings including but not limited to: saw cutting of the existing pavement where indicated or directed; excavation; cutting ends square; trimming exposed and hidden faces; provision and installation of gravel borrow; grading and compaction; provision and placement of concrete base; and all other Work incidental to the satisfactory completion of the Work.	

Item 11, 1h – Cement Concrete Sidewalk	
Measurement	Square yard of sidewalk installed
Payment	Unit price per square yard
Schedule of Payment	Completion of Work - 100%
Includes all labor, services, materials, handling, transportation, tools and equipment to provide and install new cement concrete sidewalks at the locations and limits indicated on the Drawings including but not limited to: preparation of subgrade; provision, installation and compaction of backfill and bedding soils; installation of reinforcement; removal and off-Site disposal of unsuitable excess soil materials, matching of new sidewalk to adjacent existing surfaces to meet and match pre-construction conditions, feather sidewalk grade to meet surrounding sidewalk elevation, and ensure smooth transition and all other Work incidental to the satisfactory completion of the Work.	

Item 12 – Rip-Rap Protection	
Measurement	Square yard of Rip-Rap installed
Payment	Unit price per square yard
Schedule of Payment	Completion of Work - 100%
Includes all labor, services, materials, handling, transportation, tools and equipment to provide and install rip-rap at the locations and limits indicated on the Drawings and all other Work incidental to the satisfactory completion of the Work.	

Item 13- Wooden Guardrail	
Measurement	Per linear foot of wooden guard rail installed
Payment	Unit price per linear foot
Schedule of Payment	Completion of Work - 100%
Includes all labor, services, materials, handling, transportation, tools and equipment to provide and install wooden guard rail at the locations and limits indicated on the Drawings including but not limited to: posts, post foundations, rails, hardware and appurtenances and all other Work incidental to the satisfactory completion of the Work.	

Item 14 –Pre-cast Concrete Wheel Stops	
Measurement	Actual pre-cast wheel stop installed
Payment	Unit price per each
Schedule of Payment	Completion of Work - 100%
Includes all labor, services, materials, handling, transportation, tools and equipment to install pre-cast concrete wheel stops at the locations and limits indicated on the Drawings including but not limited to: placing, anchoring and all other Work incidental to the satisfactory completion of the Work.	

Item 15- 6 inch Bollards	
Measurement	Actual bollard installed
Payment	Unit price per each bollard and associated hardware installed
Schedule of Payment	Completion of Work - 100%
Includes all labor, services, materials, handling, transportation, tools and equipment to provide and install 6” bollards at the locations and limits indicated on the Drawings including but not limited to: field painted bollard foundations, hardware and appurtenances to install each bollard and all other Work incidental to the satisfactory completion of the Work.	

Item 16 – Permeable Pavement	
Measurement	Square yard of permeable pavement installed
Payment	Unit price per square yard
Schedule of Payment	Completion of Work - 100%
Includes all labor, services, materials, handling, transportation, tools and equipment to provide and install indicated permeable pavement section at the locations and limits indicated on the Drawings including but not limited to: Excavation and disposal of any material necessary to complete the Work, Permeable Pavement Surface Course-Standard Top; site grading; provision & installation of slope protection erosion control blankets; feather grade to meet surrounding elevation, and ensure smooth transition; a and material testing and all other Work incidental to the satisfactory completion of the Work. Work includes excavation and replacement of materials determined as unsuitable for subgrade, including all required testing, documentation, and legal disposal of spoils not containing oil or hazardous materials (OHM).	

Item 17 – Permeable Pavement Sub-Base	
Measurement	Cubic yard of permeable pavement subbase installed
Payment	Unit price per cubic yard
Schedule of Payment	Completion of Work - 100%
Includes all labor, services, materials, handling, transportation, tools and equipment to provide and install indicated permeable pavement subbase at the locations and limits indicated on the Drawings including but not limited to: Sub-Base Course; site grading; subgrade grading and compaction; remove & disposal of excess soils; compaction and material testing and all other Work incidental to the satisfactory completion of the Work.	

Item 18 – Erosion Controls	
Measurement	Linear foot of erosion controls installed, maintained and removed at the completion of construction
Payment	Lump Sum
Schedule of Payment	Completion of Work - 100%
Includes all labor, services, materials, handling, transportation, tools and equipment to provide, temporarily install and maintain erosion and sedimentation control measures indicated on the Drawings and all other Work incidental to the satisfactory completion of the Work. This Work also includes the removal and proper disposal of erosion and sedimentation control measures once the Site is stabilized and project Work is complete.	

Item 19 –Regulatory Signs and Posts	
Measurement	Actual sign and posts installed
Payment	Unit price per each sign and post installed
Schedule of Payment	Completion of Work - 100%
Includes all labor, services, materials, handling, transportation, tools and equipment to provide and install regulatory signage at the locations and limits indicated on the Drawings including but not limited to: installation of signage on post, storage and protection, furnishing and installing applicable mounting hardware excavation, gravel, backfill, compaction, concrete base where required, restoration of disturbed surfaces and all other Work incidental to the satisfactory completion of the Work.	

Item 20, 1i – Bituminous Concrete Binder Course	
Measurement	Square yard of bituminous concrete binder course installed
Payment	Unit price per square yard
Schedule of Payment	Completion of Work - 100%
Includes all labor, services, materials, handling, transportation, tools and equipment to provide and install bituminous concrete binder course at the locations and limits indicated on the Drawings for trench excavation within the existing roadway including but not limited to: Bituminous Concrete Binder Course; site grading to ensure smooth transition; compaction and material testing and all other Work incidental to the satisfactory completion of the Work.	

Item 21, 1j – Bituminous Concrete Wear Course	
Measurement	Square yard of bituminous concrete wear course installed
Payment	Unit price per square yard
Schedule of Payment	Completion of Work - 100%
Includes all labor, services, materials, handling, transportation, tools and equipment to provide and install bituminous concrete wear course at the locations and limits indicated on the Drawings for trench excavation within the existing roadway including but not limited to: Bituminous Concrete Wear Course- Standard Top; site grading to meet surrounding elevation, and ensure smooth transition; adjustment of existing casting to grade including brick & mortar, concrete collars; compaction and material testing and all other Work incidental to the satisfactory completion of the Work.	

Item 22, 1k – Processed Aggregate Sub-Base	
Measurement	Cubic yard of processed aggregate sub-base installed
Payment	Unit price per cubic yard
Schedule of Payment	Completion of Work - 100%
Includes all labor, services, materials, handling, transportation, tools and equipment to provide and install processed aggregate sub-base material at the locations and limits indicated on the Drawings and all other Work incidental to the satisfactory completion of the Work.	

Item 23, 1f –Pavement Markings	
Measurement	Portion of Work completed and accepted
Payment	Lump Sum
Schedule of Payment	Completion of Work - 100%
Includes all labor, services, materials, handling, transportation, tools and equipment to install/ remove of pavement markings at the locations and limits indicated on the Drawings including but not limited to: surface cleaning and preparation, symbols, lines & words and all other Work incidental to the satisfactory completion of the Work.	

Item 24 – Abandon Existing 15” RCP	
Measurement	Per each pipe abandoned and plugged
Payment	Unit price per each
Schedule of Payment	Completion of Work – 100%
Includes all labor, services, materials, handling, transportation, tools and equipment for abandoning an existing 15” RCP. Brick and mortar the existing 15” RCP pipe and the existing catch basin. Includes all testing and Work incidental to the satisfactory completion of the Work.	

Item 25 – 2” Water Service	
Measurement	Per linear foot installed
Payment	Unit price per linear foot
Schedule of Payment	Completion of Work – 100%
Includes all labor, services, materials, handling, transportation, tools, coordination and equipment for installing 2” water service including, but not limited to: saw cut, demolish, remove and dispose concrete or asphalt paving and subbase at the trenching locations; excavate to necessary depth for water service installation; subbase; compaction; installation of 2” water service and appurtenances; backfill; site grading – grade to match existing elevations and other incidental Work, as shown on the Drawings and as specified or as	

required by field conditions or as directed.

Item 26 – 2” Curb Stop	
Measurement	Per each 2” curb stop installed
Payment	Unit price per each
Schedule of Payment	Completion of Work – 100%
Includes all labor, services, materials, handling, transportation, tools, coordination and equipment for installing 2” curb stop for water service and other incidental Work, as shown on the Drawings and as specified or as required by field conditions or as directed.	

Item 27 – 2” Corporation Stop & Tap	
Measurement	Per each 2” corporation stop & tap installed
Payment	Unit price per each
Schedule of Payment	Completion of Work – 100%
Includes all labor, services, materials, handling, transportation, tools, coordination and equipment for installing 2” corporation stop & tap conduit and other incidental Work, as shown on the Drawings and as specified or as required by field conditions or as directed.	

Item 28 – Water Tap on Wooden Post with Lock	
Measurement	Per each water tap installed
Payment	Unit price per each
Schedule of Payment	Completion of Work – 100%
Includes all labor, services, materials, handling, transportation, tools, coordination and equipment for installing a water tap and post and other incidental Work, as or as required by field conditions. Contractor to coordinate materials and type with Owner.	

Item 29 – Electric Pull Box with Frame and Cover	
Measurement	Per each electric pull box with frame and cover installed
Payment	Unit price per each
Schedule of Payment	Completion of Work – 100%
Includes all labor, services, materials, handling, transportation, tools, coordination and equipment for installing electric pull box and frame and cover, grading to match grades and other incidental Work, as shown on the Drawings and as specified or as required by field conditions or as directed.	

Item 30 – Concrete Encased Electrical Conduit

Measurement	Per linear foot installed
Payment	Unit price per linear foot
Schedule of Payment	Completion of Work – 100%
Includes all labor, services, materials, handling, transportation, tools and equipment for installing concrete encased electric conduit including, but not limited to: trenching, excavation, compaction, testing, backfill, site grading and other incidental Work, as shown on the Drawings and as specified or as required by field conditions or as directed.	

Item 31 – Sand Encased Electrical Conduit	
Measurement	Per linear foot installed
Payment	Unit price per linear foot
Schedule of Payment	Completion of Work – 100%
Includes all labor, services, materials, handling, transportation, tools and equipment for installing sand encased electric conduit including, but not limited to: trenching, excavation, compaction, concrete cap, testing, backfill, site grading and other incidental Work, as shown on the Drawings and as specified or as required by field conditions or as directed.	

Item 32 – Light Pole Foundation	
Measurement	Per each installed
Payment	Unit price per each
Schedule of Payment	Completion of Work – 100%
Includes all labor, services, materials, handling, transportation, tools and equipment for installing light pole foundations and all appurtenances and other incidental Work, as shown on the Drawings and as specified or as required by field conditions or as directed. This item is separate from the installation of light fixtures (refer to Contract Modification 3 specified in the Bid Form).	

Item 33 – Accessible Curb Ramp	
Measurement	Per each installed
Payment	Unit price per each
Schedule of Payment	Completion of Work – 100%
Includes all labor, services, materials, handling, transportation, tools and equipment for installing accessible curb ramps and detectable warning fields and other incidental Work, as shown on the Drawings and as specified or as required by field conditions or as directed.	

Item 34 – Wetland Restoration	
Measurement	Per square yard measured in place
Payment	Unit price per square yard
Schedule of Payment	Completion of Work – 100%
Includes all labor, services, materials, handling, transportation, tools and equipment for replicating the area of wetland disturbed during the installation of the culvert, headwall and rip-rap and other incidental Work, as shown on the Drawings and as specified or as required by field conditions or as directed.	

Item 35 – Landscaping	
Measurement	Portion of work completed and accepted
Payment	Percent of not to exceed contingency amount
Schedule of Payment	Based on price, operations and expenses in connection with landscape modifications, shall not exceed contingency value.
Includes all labor, services, materials, handling, transportation, tools, coordination and equipment to perform landscape modifications. Work includes installation of plantings, levelling existing soil post-construction, removal and disposal of construction debris and rocks, spreading and levelling topsoil, compost and amendments as specified, reduction of weeds, grading of soil and all other Work incidental to the satisfactory completion of the Work. Contractor shall coordinate with the Town and landscape architect to interpret and implement the Town-approved planting design.	

Item 36 – Mobilization/Demobilization	
Measurement	At Project commencement and at Project completion
Payment	Lump sum price, operations and expenses in connection with mobilization and demobilization shall not exceed five percent (5%) of the Contract Price.
Schedule of Payment	75% Project Commencement 25% Final Completion
Includes delivery to and removal of equipment from the Project Site, temporary utilities, facilities and controls, obtaining necessary permits including associated fees, insurance and bond costs, signage, development of pre-construction schedules and plans required by the General Conditions, Supplementary Conditions and General Requirements; necessary pre-construction investigations, verifying existing field conditions and documentation, coordination, preparation of Work and operations, movement of men, equipment and all other Work and operations which must be performed from the time prior to the start of the Work to the final acceptance of the Work by the Town.	

Item 1c – Remove and Dispose Tree	
Measurement	Per each tree removed and disposed of
Payment	Unit price per each
Schedule of Payment	Completion of Work - 100%
Includes all labor, services, materials, handling, transportation, tools and equipment to remove and dispose of trees and associated branches, roots as defined on the Drawings and backfill with approved material to grades specified, and all other Work incidental to the satisfactory completion of the Work.	

Item 1d –Remove and Dispose Curb	
Measurement	Actual length of curbing removed and disposed of
Payment	Unit price per linear foot
Schedule of Payment	Completion of Work – 100%
Includes all labor, services, materials, handling, transportation, tools and equipment to remove and legally dispose curbing and all appurtenances at the locations and limits indicated on the Drawings including but not limited to: saw cutting of the existing pavement where indicated or directed; excavation; cutting ends square; and all other Work incidental to the satisfactory completion of the Work.	

Item 1e – Cast-In-Place Concrete Curb	
Measurement	Linear feet of curbing installed
Payment	Unit price per linear foot
Schedule of Payment	Completion of Work - 100%
Includes all labor, services, materials, handling, transportation, tools and equipment to furnish and install cast-in-place concrete curb at the locations and limits indicated on the Drawings including but not limited to: preparation of subgrade; provision, installation and compaction of backfill and bedding soils; removal and off-Site disposal of unsuitable excess soil materials; matching of new curb to adjacent existing surfaces to meet and match pre-construction conditions; ensure smooth transition between existing and proposed and all other Work incidental to the satisfactory completion of the Work.	

Item 1g – Mill	
Measurement	Square yard of milling existing pavement
Payment	Unit price per square yard
Schedule of Payment	Completion of Work - 100%
Includes all labor, services, materials, handling, transportation, tools and equipment to sawcut, mill and dispose of existing pavement to the depths and limits indicated on the Drawings and all other Work incidental to the satisfactory completion of the Work.	

Contract Price Modification 1 – Granite Curb	
Measurement	Actual length of granite curbing installed
Payment	Unit price per linear foot
Schedule of Payment	Completion of Work – 100%
Includes all labor, services, materials, handling, transportation, tools and equipment to substitute precast concrete curb specified in the Drawings for granite curb. Work includes, but is not limited to: saw cutting of the existing pavement where indicated or directed; excavation; cutting ends square; trimming exposed and hidden faces; provision and installation of gravel borrow; grading and compaction; provision and placement of concrete base; and all other Work incidental to the satisfactory completion of the Work. Bidder shall provide total bid price for Work in Section 004101.	

Contract Price Modification 3 – Lighting	
Measurement	Per each installed
Payment	Unit price per each
Schedule of Payment	Completion of Work – 100%
Includes all labor, services, materials, handling, transportation, tools and equipment for installing light pole, fixtures, outlets and all appurtenances and other incidental Work, as shown on the Drawings and as specified or as required by field conditions or as directed. This item is separate from the installation of light pole foundations (refer to Item No. 32). Bidder shall provide total bid price for Work in Section 004101.	

PART 2 - PRODUCTS (not used)

PART 3 – EXECUTION (not used)

END OF SECTION

This page intentionally left blank

SECTION 01 50 00

TEMPORARY FACILITIES AND CONTROLS

PART 1 – GENERAL

1.01 SUMMARY

A. This Section specifies temporary facilities and controls for execution of the Work put into place for use only during the period of construction, that will be removed when no longer required for construction operations, and applies to all Specifications and Drawings.

1. In certain paragraphs, checked items indicate requirements applicable to the Project.

2. Provisions of this Section may be supplemented in the **Specific Project Requirements and Procedures** or other sections of Division 01.

B. Section Includes

1.02 TEMPORARY CONSTRUCTION FACILITIES
Barriers
Protection of Work
Security
Safety Facilities
Access Roads
Parking
Field Offices
Staging Area
Project Identification
Progress Cleaning and Waste Removal

1.03 TEMPORARY UTILITIES

1.04 TEMPORARY CONTROLS
Dust Control
Water Control and Dewatering
Erosion and Sediment Control
Noise Control
Pollution Control
Traffic Regulation

1.05 REMOVAL OF TEMPORARY UTILITIES, FACILITIES, AND CONTROLS

1.02 TEMPORARY CONSTRUCTION FACILITIES

A. Barriers

1. Comply with the requirements of Paragraph 6.11. of the Standard General Conditions and Supplementary Conditions, if any.

2. Furnish barriers to prevent unauthorized entry to and clear delineation of construction areas, to allow for Owner's use of Site, and to protect existing facilities and adjacent properties from damage from construction operations as recommended by OSHA and as otherwise required for the protection of life and property during construction.

3. Construct barricades and protective facilities in accordance with local and state regulations. Furnish and install signs, lights, reflectors, and such protection facilities as may be required.

4. Furnish barricades required by governing authorities for public rights of way.

5. Provide protection for plant life designated to remain. Replace damaged plant life.

6. Protect non owned vehicular traffic, stored materials, Site and structures from damage.

7. If required, furnish commercial grade, minimum 8 foot high chain link fence around construction Site. Equip with vehicular gates with locks.

B. Protection of Work

1. Protect Work during working and non-working hours.

2. Provide special protection where specified in Specifications or Drawings and in accordance with manufacturer recommendations.

3. Furnish temporary and removable protection for installed equipment and material. Control activity in immediate Work area to minimize damage.

4. Protect exterior areas of Work from damage. Prohibit traffic from landscaped areas.

5. Buildings and Enclosures

   a. Furnish protective coverings at walls, projections, jambs, sills, and soffits of openings and protect finished floors, stairs, and other surfaces from traffic, dirt, wear, damage, or movement of heavy objects, by protecting with durable sheet materials.

   b. Prohibit traffic or storage upon waterproofed or roofed surfaces. If traffic or activity is necessary, obtain recommendations for protection from waterproofing or roofing material manufacturer.

6. Whenever gale or high winds are forecast, take measures to secure loose material, equipment or other items that could be blown and be damaged or cause damage. Do not leave such loose items unsecured at end of a working day. Particular attention shall be taken with scaffolding and items placed or stored on roofs or within a structure prior to being enclosed.

7. Provide for removal of snow and ice which may impede Work, damage the finishes or materials, be detrimental to workers, or impede trucking, delivery, or moving of materials at the Site, or prevent adequate drainage of the Site or adjoining areas.

C. Security

1. Provide protection to stored items, the Work and Owner's operations from unauthorized entry, vandalism, or theft, and against fire, storms and other losses during working and non-working hours.

2. Coordinate with Owner's security program.

D. Safety Facilities

1. Provide first aid and other safety facilities required by Laws and Regulations during working and non-working hours.

E. Access Roads

1. Construct and maintain temporary roads accessing public thoroughfares to serve construction area. Control dust and water.

2. Extend and relocate as Work progress requires. Provide detours necessary for unimpeded traffic flow.

3. Provide for emergency access and maintain throughout the Work Site.

F. Parking

1. Do not allow construction vehicle parking on existing pavement or sidewalks.

   ☐ Available parking areas at the Project Site are identified on the Drawings

   ☒ Off-Site construction parking area to be established at a location determined by Contractor.

G. Field Offices

☒ Delete - not required for the Project.

☐ Provide for the Project as follows.

1. Furnish weather tight office with lighting, electrical outlets, heating, cooling and ventilating equipment, and equip with furnishings and accessories to accommodate supervision of Work, maintenance of records, and project meetings, including, but not limited to the following.

   - Desk and chairs (2 cushioned office desk chairs and 4 metal fold chairs)
   - Plan table with light and stool
   - 3 locking file cabinets
   - Hanging plan rack
   - Book case with 4 shelves
   - "All-in-one" color copier, printer, scanner and fax machine, capable of 11 by 17 output (OR separate color copier, color printer, color scanner, all capable of 11 by 17 output, and fax machine)
   - Paper stock for duration of Project
   - Telephone with answering machine (or telephone service with voicemail feature)
   - Refrigerator, microwave, and water cooler with bottled water supply for duration of Project
   - First aid kit

   ☐ Furnish separate office for use by Engineer and Resident Project Representative similarly equipped with fully functional equipment and furniture.

2. Maintain utilities per Article 1.03 below for the duration of the Project.

3. Location of Field Offices

☐ Locate as shown on the Drawings.

☐ Locate as specified in the **Specific Project Requirements and Procedures**.

H. Staging Area

☐ Locate as shown on the Drawings.

☐ Locate as specified in the **Specific Project Requirements and Procedures**.

☒ Owner is not providing a location for staging area. Determine and secure a location for staging area.

I. Project Identification

☒ Delete - not required for the Project.

☐ Provide for the Project

☐ as specified in the **Specific Project Requirements and Procedures**.

☐ as shown on the Drawings.

J. Progress Cleaning and Waste Removal

1. Comply with the requirements of Paragraph 6.11. B and C of the Standard General Conditions and Supplementary Conditions, if any.

2. Maintain areas free of waste materials, debris, and rubbish and maintain the Site in a clean and orderly condition.

3. Remove debris and rubbish from spaces and other closed or remote spaces before enclosing the space.

4. Collect and remove waste materials, debris, and rubbish from Site at least weekly and legally dispose off-Site.

1.03 TEMPORARY UTILITIES

A. Power service

☒ Delete - not required for the Project.

☐ Provide for the Project as follows.

1. Arrange for and pay for required power service from local electric utility for duration of Project. Exercise measures to conserve energy. Furnish and install required equipment including pole of sufficient height to provide proper clearance and install weatherproof box of such size to house service disconnect, overcurrent protection, electric meter, and other required equipment.

   ☐ Locate as shown on the Drawings.

   ☐ Locate as designated by Owner.

☐ See the **Specific Project Requirements and Procedures** for additional requirements.

B. Telephone service and internet access to field offices

☒ Delete - not required for the Project.

☐ Provide for the Project as follows.

1. Arrange for, pay for, and maintain telephone service and internet access to field offices at time of Project mobilization and for duration of Project.

2. Obtain voicemail feature if answering machine not provided.

3. Provide wireless, high speed broadband internet access via DSL, cable, satellite, or T1.

☐ See the **Specific Project Requirements and Procedures** for additional requirements.

C. Water service

☒ Delete - not required for the Project.

☐ Provide for the Project as follows.

1. Arrange for, pay for and maintain suitable quality water service as required for duration of Project.

   ☐ Owner will provide water at no charge for construction.

☐ See the **Specific Project Requirements and Procedures** for additional requirements.

D. Furnish and maintain required sanitary facilities and enclosures. Do not use existing facilities.

E. Furnish lighting for construction operations. Furnish lighting for exterior staging and storage areas and for security purposes. Maintain lighting and provide routine repairs.

F. Furnish heat devices and heat and cooling devices as required to maintain specified conditions for construction operations.

G. Ventilate enclosed areas to assist cure of materials, to dissipate humidity, and to prevent accumulation of dust, fumes, vapors, or gases.

H. Fire Protection

1. Provide temporary fire protection equipment and services during construction per NFPA and local fire code and regulations, and fire marshal's requirements.

2. Use Work procedures that minimize fire hazards to the extent practicable and materials that are fire resistant where possible. Collect and remove combustible debris and waste materials from the Site each day. Store fuels, solvents, and other volatile or flammable materials away from the construction and storage areas in well-marked, safe containers in accordance with Laws and Regulations.

1.04 TEMPORARY CONTROLS

A. Dust Control: Execute Work by methods to minimize raising dust from construction operations. Provide positive means to prevent air-borne dust from dispersing into atmosphere. Utilize the application of sprinkled water to reduce the emission of air-borne soil particulates from the Project Site.

B. Water Control and Dewatering

☐ Delete - not required for the Project.

☒ Provide for the Project as follows.

☒ See the **Specific Project Requirements and Procedures** for additional requirements.

Grade Site to drain away from excavations to approved drainage collection facilities. Ensure collected surface drainage water meets permitted criteria for sediment content prior to discharge.

1. Maintain excavations free of water. Furnish, operate and maintain pumping equipment.

2. Dewater excavations and legally dispose of water in a manner that will not cause injury to public and private property.

3. Protect Site from puddling, ponding or running water.

4. Design, furnish, install, maintain, operate and remove temporary dewatering systems as required to lower and control water levels and hydrostatic pressures in excavations during construction; legally dispose of pumped water; construct, maintain, observe and, except where indicated or required to remain in place, remove dewatering equipment and system at the completion of construction.

    a. Dewatering may include: lowering the water table, intercepting and collecting seepage which may penetrate the support of excavation, slopes or bottom of the excavation; increasing the stability of excavated slopes; preventing loss of material from beneath the slopes or bottom of the excavation; reducing lateral loads on sheeting and bracing; limiting horizontal displacements and stresses in support of excavation to tolerable and allowable levels; preventing displacements of existing structures, utilities, pavements, and sidewalks; improving the excavation and hauling characteristics of sandy soil; preventing rupture or heaving of the bottom of any excavation; and disposing of pumped water.

b. *Normal dewatering* is defined as using conventional pumps installed in open excavations, ditches, or sumps to control water and allow for installation of the pipe in a dry trench.

c. *Special dewatering* is defined as installing wellpoints, deep wells, or eductor and ejector systems to control groundwater and hydrostatic pressures to allow for installation of the work. Special dewatering includes design of the dewatering system by a Professional Engineer currently registered in the state where the Project is located in good standing, and conducting additional borings or subsurface explorations deemed necessaryby the Contractor, and approved by the Engineer, to support design.

1) For Special Dewatering, retain the services of a Professional Engineer currently registered in the state where the Project is located in good standing, experienced in design of dewatering systems, to independently evaluate the boring logs and other soils information available to determine those areas that will require special dewatering techniques and to design the required system. If, in the opinion of the Contractor or Contractor's Dewatering Professional Engineer, additional borings are needed to design special dewatering systems or determine areas where special dewatering techniques will be required, the Contractor shall retain and pay for the services of a boring subcontractor. Contractor's Dewatering Professional Engineer shall provide sufficient on-Site inspection and supervision to assure that the dewatering is carried out in accordance with the approved design.

d. Design a dewatering system capable of:

1) effectively reducing the hydrostatic pressure and lowering the groundwater levels to a minimum of 2 feet below excavation subgrade in the existing fills and any organic peat, and below the excavation subgrade in the existing organic silts/clays unless otherwise directed by the Engineer, so that all excavation bottoms are firm and dry;

2) maintaining a dry and stable subgrade until the structures, pipes, appurtenances, and drainage pipe and structure bedding to be built therein have been completed to the extent that structures, pipes, and appurtenances will not be floated or otherwise damaged;

3) lowering of the groundwater level within the work area without adversely affecting existing structures, utilities, pavements, sidewalks or wells outside of the Work area.

e. Submit the following.

1) Plans and description of the Normal and/or Special Dewatering systems, including the number, location and depth of wells, wellpoints or sumps; designs of filters to prevent pumping of fine soil; method and location for filtering, sedimentation tanks and legal disposal of pumped water; and flow capacity of proposed system, accounting for groundwater level relative to tide cycles if applicable

2) Design calculations, description and complete layout drawings, stamped and signed by Contractor's Dewatering Professional Engineer, at least two weeks prior to scheduled installation of Special Dewatering system

3) Locations of observation wells

4) Records of pump operation and groundwater elevations

5. Dewatering Operations and Procedures

a. Provide electrically operated dewatering equipment, powered with dedicated generators adequately sized to operate the dewatering system and capable of running on commercial power. Provide standby equipment independent of commercial power and provide for dewatering within 24 hours upon primary pump or power failure. No work shall be performed by the Contractor below the pre-construction groundwater level during dewatering system failure.

b. Provide suitable temporary pipes, flumes or channels for water that may flow along or across the Site of the Work.

c. Provide dewatering equipment with noise attenuation systems capable of meeting the governing noise regulation requirements.

d. Encapsulate the suction end of the pump with crushed stone, filter fabric, and other materials to minimize the amount of silt discharged to the amount allowed by the construction dewatering permit.

e. Do not operate equipment on paved surfaces to prevent damaging these surfaces.

f. Locate dewatering facilities to prevent interference with utilities and construction work to be done by others.

g. For dewatering operations with relatively minor flows, direct pump discharges using filtration bag or system per Erosion and Sediment Control below, or pump into hay bale sedimentation traps lined with filter fabric. Filter water through the hay bales and filter fabric prior to seepage into storm drainage or any natural water course.

h. For dewatering operations with larger flows, provide pump discharges into a steel dewatering/sedimentation basin. Use steel baffle plates to slow water velocities, to increase the contact time, and allow adequate settlement of sediment prior to discharge into waterways, storm drainage or discharge point allowed by the construction dewatering permit.

i. Utilize silt sacks in catch basins when excess silt is suspended in the discharge water per Erosion and Sediment Control below.

j. If siltation basin is used, size to effectively filter for the volume and discharge rate of water anticipated without overflow.

k. Provide treatment necessary to prevent discharge of silty and/or contaminated ground water caused by the Contractor's operations, or any contaminated ground water that may pass from excavated surfaces and/or through the excavation support system selected by the Contractor.

l. Dispose of water pumped or drained from the Work in accordance with permit requirements and in a manner to prevent undue interference with other work or damage to adjacent properties, pavements and other surfaces, buildings, structures and utilities.

m. Obtain necessary regulatory approvals for the disposal of dewatering flows, including, among others, approval by the Environmental Protection Agency under the National Pollutant Discharge Elimination System (NPDES) program for construction dewatering activities. Submit the completed and approved construction dewatering permit to the Engineer immediately upon receipt.

6. Special Dewatering

a. Use Special Dewatering as necessary if Normal Dewatering methods are inadequate to ensure dry and stable excavation subgrade conditions.

b. Special Dewatering techniques may consist of one- or two-stage wellpoint systems, deep wells, or eductor and ejector type systems. Design with suitable screens to prevent pumping of fines and to address specified Work Site conditions.

c. In areas requiring special dewatering, lower the groundwater level to a minimum of 2 feet below the existing fill and/or organic peat subgrades or to the excavation subgrade for organic silt/clay subgrades prior to any installation and maintain that groundwater level until the excavation has been backfilled and provide monitoring by Contractor's Dewatering Professional Engineer to ensure conformance with the requirements herein.

d. Furnish materials and install at least two observation wells at each excavation area. The location of the wells shall be proposed in the field by the Contractor's Dewatering Professional Engineer and reviewed and approved by the Engineer.

C. Erosion and Sediment Control

☐ Delete - not required for the Project.

☒ Provide for the Project as follows.

☒ See the **Specific Project Requirements and Procedures** for additional requirements.

1. Plan and execute construction using methods to control surface drainage from cuts and fills, from borrow and waste disposal areas and prevent erosion and sedimentation.

2. Submit erosion and sediment control plan to Engineer prior to the start of construction.

3. Install erosion and sediment controls as may be shown on the Drawings and as required by Laws and Regulations. Install additional erosion and sedimentation control measures beyond those shown on the Drawings as necessary to stabilize the Site. Coordinate temporary erosion controls with permanent erosion controls to the extent practical. Provide and maintain devices to control erosion, siltation, and sedimentation that occur during construction operations. Undertake reasonable precautions and measures to avoid erosion of soil and to prevent silting of drainage ditches, storm sewers, rivers, streams, and lakes.

4. Employ pollution prevention measures, erosion and sedimentation control before, during, and after soils are exposed. Implement measures prior to soil disturbance or soil storage to the extent possible to ensure that such measures are in place before activity occurs and employ additional measures as the Work progresses. Implement and maintain as necessary until the Site is permanently stabilized.

5. Perform inspections of disturbed soil areas, material storage areas exposed to precipitation, and erosion control measures with Engineer a minimum of once every 14 days and also within 24 hours after any storm event greater than 0.5-inches of rainfall. Immediately correct deficiencies in the erosion control measures identified or indicated by failures or erosion by implementing additional measures or different techniques to correct and prevent subsequent erosion at no additional cost to Owner.

6. In the event that silt or debris breaches erosion control, immediately remove and clean silt or debris from drainage ditches and storm sewers and revise erosion control measures as required by the Conservation Commission or the Engineer. Should silt or debris breach erosion controls and reach rivers, streams or lakes, immediately notify local, state or Federal representatives as required and implement required remediation methods at no additional cost to Owner.

7. Limit duration of the exposure of soils on embankments, excavations, and graded areas to a minimum.

8. Provide temporary measures such as berms, dikes and drains to prevent water flow. Install erosion control measures in any ditch, swale or channel before water is allowed to flow in the waterway. Handle water pumped from trenches to minimize discharge of silty water to the maximum extent practicable.

9. Stabilize storm drain outfalls as shown on the Drawings before the discharge points become operational. Install inlet protection immediately upon construction of culverts.

10. Stabilize disturbed areas with temporary and permanent erosion control practices as soon as practicable, but no more than 14 days after construction activity on a particular portion of the Site has temporarily or permanently ceased. Exceptions to this time requirement include: a) where construction activities will resume on the particular portion of the Site within 21 days; and b) where snow cover delays initiation of stabilization measures.

11. Place stockpiled topsoil on the Site away from natural drainages, in piles with side slopes of 50 percent to 70 percent. Install siltation fence around the base of the pile to prevent eroding soil from washing into drainages. Cover topsoil piles which are to remain for a period of 21 days or more with temporary seed and mulch immediately following stockpiling.

12. Conduct pavement sweeping to remove sediment and soil debris accumulation on pavement resulting from construction activity

13. Siltation/Silt Fence

    a. Filter fabric: suitable for erosion control.

    b. Wood posts: oak, 2 inches by 2 inches in section, and at least 4.5 feet in length.

    c. Erosion control fencing: heavy-duty filter fabric towed into the existing soil as shown on the Drawings.

    d. Construct as shown on Drawings or as directed by Engineer. Install parallel to contours where possible, prior to Site clearing and grading activities.

        1) Dig a 6 inch by 6 inch minimum trench where the fence is to be installed. Position the fence in the trench with the fence posts set at 8 feet on center (maximum). Curve ends of fence uphill to prevent flow around ends.

        2) Staple sedimentation control fabric and the industrial netting to each post. When joints are necessary, splice filter fabric together only at support posts with 6-inch overlap and securely seal.

        3) Bury lower edge of fabric at least 6 inches below ground surface to prevent underflow. Backfill trench and compact soil over filter fabric.

        4) Installed height: minimum 2.5 feet and 36 inches maximum.

        5) Inspect frequently; repair or replace any damaged sections.

14. Temporary Erosion Control Matting

    a. Rolled matting blanket consisting of curled wood excelsior, coconut fiber, straw or paper bound with a weave of twisted craft paper, cotton cord or plastic mesh.

b. Provide staples for fastening matting to the ground. Staples: fabricated in a "U" shape from 11 gage or heavier stiff steel wire, 6 to 12 inches in length and 1 to 2 inches across.

c. Surface Preparation and Installation

1) Conform to grades and cross sections for slopes and ditches shown on the Drawings. Finish to a smooth and even condition with all debris, roots, stones, and lumps raked out and removed. Loosen soil surface to permit bedding of the matting.

2) Unless otherwise directed, apply seed prior to placement. When directed, spread additional seed over matting, particularly at those locations disturbed by building slots. Press matting onto the ground with a light lawn roller or by other similar means.

3) Bury edges of matting around the edges of catch basins and other structures.

15. Seeding

a. Select seed variety and applied rates based upon the date of application per the following table. Equivalent seed mixture based on suitability for use in controlling erosion of the various soil types and slopes may be used as approved by the Engineer.

Dates	**Seed**	**Applied Rate (pounds per 1,000 feet^2)**
4/1 to 7/1 8/15 to 9/15	Oats	1.8
4/1 to 7/1	Annual Ryegrass	0.9
5/15 to 8/15	Sundangrass	0.9
9/15 to 10/15	Winter Ryegrass	2.6

1) Sow seed at the rates indicated, on the pure live seed basis.

2) Mulch areas where temporary seeding has been applied. Do not mulch seeded areas where matting will be immediately installed. If temporary seeding does not achieve adequate growth by November 1, apply an additional layer of mulch.

3) Mulch temporarily or permanently seeded areas, areas which cannot be seeded within the recommended seeding dates, and any soil stockpile areas, immediately following seeding. Straw or hay mulch, wood fiber mulch, and hydromulch are recommended.

16. Sod: grown from certified seed of adapted varieties to produce high quality sod free of any serious thatch, weeds, insects, diseases and other pest problem, be at least one year old and not older than three years, and cut with a 1/2 inch to 1 inch layer of soil.

    a. Lay sod strips on the prepared soil, perpendicular to the slope or direction of water flow, starting at the lowest elevation. Butt the edges and ends of the sod strips together and tamp or roll. Stagger joints.

    b. Staple sod strips at ends and at 3-foot intervals along the center of the strip.

    c. Irrigate sodded area immediately after installation.

17. Catch Basin Silt Sacks

    a. Style: Silt Sack Regular Flow.

    b. Test Method: ASTM D-4884 165.0 lbs./inch.

    c. Silt sack seams: certified average wide width strength.

    d. Meet the following ASTM D-4884 standards. Properties are Minimum Average Roll Values (MARV).

Property	Test Method	Units	Test Results
Grab Tensile	ASTM D-4632	lbs.	315x300
Grab Elongation	ASTM D-4632	%	15x15
Puncture	ASTM D-4833	lbs.	125
Mullen Burst	ASTM D-3786	psi	650
Trapezoid Tear	ASTM D-4533	lbs	120x150
UV Resistance	ASTM D-4355	%	90
Apparent Opening	ASTM D-4751	US Sieve	40
Flow Rate	ASTM D-4491	gal/min/ft ^{2}	40
Permittivity	ASTM D-4491	sec -1	0.55

        1) Utilize silt sacks in catch basins as required when excess silt is suspended in discharge water.

18. Filtration Bag or System for Discharge from Excavation Dewatering

    a. Meet the following standards. Properties are Minimum Average Roll Values (MARV).

Property	Test Method	Units	Test Results
Flow Rate	ASTM D-4491	gal/min/ft ^{2}	40
Permittivity	ASTM D-4491	sec -1	0.55

b. For discharge from excavation dewatering, install filtration bag or system or dewatering siltation basin constructed of a hay bale barrier lined with filter fabric sized to handle the volume of dewatering without overflowing.

19. Compost Filter Socks

a. Furnish and install biodegradable mesh "socks" filled with mature, clean compost per EPA National Pollutant Discharge Elimination System (NPDES) specifications.

1) Install per EPA and manufacturers recommendations.

2) Install parallel to contours where possible. Stake socks as needed to stabilize. Inspect frequently and repair as necessary.

20. Provide detention basins or water filtration systems for dewatering and coordinate locations with Engineer. See Dewatering in Paragraph B. above.

21. Other Temporary Measures

a. Provide and maintain temporary slope drains as required.

b. Employ other temporary erosion control measures as directed by the Engineer or local Conservation Commission.

22. Maintenance

a. Inspect erosion control practices immediately after each rainfall and at least daily during prolonged rainfall or snowmelt for damage. Make appropriate repairs or replacement until Final Completion at no additional cost to the Owner.

b. Remove silt from siltation fence and/or haybale when it has reached one-quarter of the bale and/or fence height, or prior to expected heavy runoff or siltation.

c. Repair matting if any staples become loosened or raised, or if any matting becomes loose, torn, or undermined, make satisfactory repairs immediately.

d. Maintain areas mulched or matted until Final Completion, at no additional cost to the Owner.

e. Maintain sediment basins by removing silt that reaches a depth of over one foot, at no additional cost to the Owner, until Final Completion.

23. Removal of Temporary Erosion Control

    a. Remove temporary materials and devices upon completion of the Work when permanent soil stabilization has been achieved. Re-use materials in good condition if approved by Engineer.

        1) If silt socks are used, remove in paved areas or cut open and disperse media in unpaved areas.

    b. Level and grade to preconstruction conditions and to the extent required to prevent any obstruction of the flow of water or any other interference with the operation of or access to the permanent works.

    c. Remove siltation fences only when adequate grass growth has been established.

    d. Repair areas damaged by silt fences and hay bales to preconstruction conditions to the satisfaction of the local Conservation Commission and the Engineer.

    e. Remove unsuitable materials from Site and dispose of in a lawful manner.

D. Noise Control

1. Provide methods, means, and facilities to minimize noise from construction operations.

2. Provide noise attenuation systems capable of meeting the Department of Environmental Protection Division of Air Quality Control regulations governed by the following policy:

   "*A source of sound will be considered to be violating the Department's noise regulation (310 CMR 7.10) if the source:*

   - *Increases the broadband sound level by more than 10 dB(A) above ambient, or*
   - *Produces a "pure tone" condition when any octave band center frequency sound pressure level exceeds the two adjacent center frequency sound pressure levels by 3 decibels or more.*

   "These criteria are measured both at the property line and at the nearest inhabited residence. Ambient is defined as the background A-weighted sound level that is exceeded 90% of the time measured during equipment operating hours. The ambient may also be established by other means with the consent of the Department."

3. Construct sound enclosures or utilize other noise reduction techniques if the equipment does not meet the noise level requirements.

E. Pollution Control

☐ Delete - not required for the Project.

☒ Provide for the Project as follows.

☐ See the **Specific Project Requirements and Procedures** for additional requirements.

1. Provide methods, means, and facilities to prevent contamination of soil, water, and atmosphere from discharge of noxious, toxic substances, and pollutants produced by construction operations.

a. Water Pollution Control

1) Assure that sediment, debris, petroleums, chemicals, or other contaminants will not enter existing drainage facilities and channels. Use construction methods that will prevent entrance of pollutants and wastes into existing streams, rivers, lakes, and flowing and dry watercourses.

2) Obtain legal disposal sites and dispose of pollutants and wastes in a legal manner.

3) Respond immediately to emergencies as directed when water quality of existing streams, rivers, lakes and flowing and dry watercourses is threatened. Take corrective action to remove or contain pollutants until a permanent solution is determined.

b. Air Pollution Control

1) Equipment and vehicles that exhibit excessive exhausts emissions due to poor engine adjustments or inefficient operation will not be permitted to operate until corrective repairs or adjustments are made.

2) Burning of materials from clearing or grubbing operations, combustible construction materials, and rubbish will not be allowed.

F. Traffic Regulation

☐ Delete - not required for the Project.

☒ See the **Specific Project Requirements and Procedures** for additional requirements.

☒ Provide for the Project as follows.

1. Control and maintain traffic within the Project area.

   ☒ Submit traffic control plans and coordinate with Owner and local agencies. Submit plan for traffic control to Owner for review 14 days in advance of any Work within public right-of-way, street closure or detour.

   ☐ A traffic control plan is not required for the Project.

2. Provide and maintain traffic control and maintenance devices in accordance with Part 6, Temporary Traffic Control, of the "*Manual on Uniform Traffic Control Devices for Streets and Highways*", published by the U.S. Department of Transportation, Federal Highway Administration and other applicable codes and standards as specified. Operate devices 24 hours per day as required.

3. Provide for access by emergency vehicles, such as police, fire, and disaster units at all times. Contractor shall be liable for damages resulting from failure to provide such access.

4. During construction hours, traffic flow must be controlled by uniformed traffic police officers or other traffic controllers allowed by Laws and Regulations. The services of traffic controllers shall in no way relieve the Contractor of its responsibilities under the Contract.

5. Maintain minimum of one moving lane on roadways at all times.

   a. Where detours are permitted, provide necessary barricades, flashers, flashing arrows and signs in accordance with referenced Manuals and Laws and Regulations.

   b. Provide gravel borrow and bituminous concrete to maintain temporary passable travel lane ramps, temporary bridging, steel plates, temporary pavement, wood-framed walkways, caution, safety and other necessary signs directing the pedestrian and vehicular traffic towards unblocked and safe areas.

6. Provide safe access/egress to businesses and abutting property owners within the Project area. In areas where the construction activity is in progress, install directional signs in front of businesses indicating "OPEN FOR BUSINESS" or similar for guidance of customers.

    a. Certain construction operations such as utility work and roadway/sidewalk reconstruction may restrict access/egress on some roads and to businesses and abutting property owners. Under these circumstances, schedule operations during off-peak hours or late evenings with Owner approval so that a particular work activity can be completed in the shortest possible time.

    b. Provide 48 hours notice to businesses and abutting property owners when access/egress will not be available or restrictions will exist.

7. Exercise particular care to establish and maintain such methods and procedures that will not create hazards.

    a. Remove or properly cover traffic control, safety devices and/or signs having messages that are irrelevant to normal traffic conditions at the end of each Work period. Keep signs clean at all times and provide that legends are distinctive and unmarred.

    b. Place excavated material and construction equipment so that vehicular and pedestrian traffic is maintained at all times unless road closure permit is obtained. If the Contractor's operations cause traffic hazards, implement appropriate safety measures immediately.

    c. In areas of high pedestrian and vehicular traffic volume, the remove waste materials and construction equipment from the Work Site on a daily basis. Do not park construction equipment overnight on the Site or the adjacent roads unless permitted by Owner.

    d. Provide night watchmen where special hazards exist.

8. Post signage clearly stating that any vehicle impeding the progress of construction will be towed at the vehicle owner’s expense. Towing charges incurred by Owner for Contractor’s failure to post such signs will be borne by the Contractor.

1.05 REMOVAL OF TEMPORARY UTILITIES, FACILITIES, AND CONTROLS

A. Remove temporary utilities, equipment, and facilities before Final Application for Payment inspection.

B. Remove temporary underground installations and grade Site as indicated. Clean and repair damage caused by installation or use of temporary utilities, facilities, and controls.

C. Restore existing facilities and areas used during construction to original condition. Restore permanent facilities used during construction to specified condition.

END OF SECTION

SECTION 01 60 00

PRODUCT REQUIREMENTS

PART 1 – GENERAL

1.01 SUMMARY

A. This Section specifies general requirements for products, materials and equipment and applies to all Specifications and Drawings.

1. Provisions of this Section may supplemented in individual Specification sections.

B. Section Includes

1.02 SOURCE QUALITY CONTROL
General
Independent Testing Agency Certification
Factory Testing

1.03 PRODUCT REQUIREMENTS
General
Transportation and Handling
Storage and Protection

1.04 WARRANTIES

1.02 SOURCE QUALITY CONTROL

A. General

1. Subject material and equipment furnished under the Contract Documents to a complete factory testing program as specified.

2. Shop Drawings and submittals: reviewed by Engineer before initiating testing program.

3. Perform checks and tests in accordance with manufacturer's recommendations and referenced standards.

4. Evaluate test results and advise Owner immediately of any discrepancy between test results and test limits or the failure of any device or system under test. Include test limits for acceptability applicable to each test on the certified test records.

5. Record test information, including the evaluation of testing results, on forms approved by Owner and Engineer.

B. Independent Testing Agency Certification

1. If specified, furnish certificates from an independent testing agency.

2. Independent testing agency to certify that material and equipment components have been examined and tested and are in conformance with the requirements specified in the Contract Documents.

3. Take Samples in accordance with the requirements specified in the Contract Documents, as selected by Owner or independent testing agency. Furnish and ship at no additional cost to Owner.

C. Factory Testing

1. Provide 14 days prior written notice of factory inspections and tests to Owner and Engineer.

2. If failure to give proper written notice results in material and equipment being assembled or covered before a factory inspection or test, make material and equipment ready for inspection or test and reassemble or recover at no additional cost to Owner.

3. Owner may inspect any portion of material and equipment furnished at any reasonable time during manufacture and may witness testing of any portion of material and equipment wherever located. Owner and Engineer to witness tests only.

4. Furnish, set up and operate test equipment and facilities.

5. If facilities for conducting required tests are unavailable to the manufacturer, conduct tests elsewhere or have them performed by an independent agency approved by Owner.

6. Protect material and equipment after testing and checking to provide that subsequent testing of other equipment or systems does not disturb, damage or otherwise interfere with functional capability of material and equipment.

7. Assume responsibility for protection of material and equipment and safety of all personnel during factory testing program.

8. Grounds for rejection: failure to withstand tests; failure to meet ratings; failure to meet applicable standards.

9. In the event of failure

   a. Submit revisions of documents requiring approval for changes required for rectification.

   b. Obtain Owner's and Engineer's approval before making such changes.

   c. Provide written details of any changes to be made not requiring approval.

   d. Notify Owner and Engineer in writing before retesting.

   e. Furnish new material and equipment which meets requirements of the Specifications if rejected material and equipment cannot be rectified to satisfaction of Owner and Engineer.

   f. Retest after rectification in presence of Owner or Engineer.

10. Assume responsibility for all costs, including, but not limited to: loss or damage to materials and equipment resulting from testing; retesting; rectification; new material and equipment to replace damaged or non-rectifiable material and equipment; removal, furnishing, transportation, unloading, and installation of replacement material and equipment; and witness of testing by Owner and Engineer including travel, lodging, meals, and payroll.

11. Submit certified test reports which define tests, list results, and are signed by Contractor's representative, and copies of raw data collected during tests. Submission of certified test reports does not relieve Contractor of responsibility for material and equipment meeting requirements of the Contract Documents after installation.

1.03 PRODUCT REQUIREMENTS

A. General

1. Products include new material and equipment incorporated into the Work and may also include existing material and equipment required for reuse. This does not include machinery and equipment used for preparation, fabrication, conveying, installation and erection of the Work.

2. Do not use materials and equipment removed from existing Work Site, except as specifically permitted.

3. Provide complete with accessories, trim, finished, safety guards, and other devices and details need for a complete installation and for the intended use or effect.

4. Provide standard products which have been produced and used successfully on other similar projects for similar applications. Provide products which are likely to be available to Owner in the future for items required for maintenance and repair or replacement Work.

5. Furnish interchangeable components of the same manufacturer, for similar components.

B. Transportation and Handling

1. Transport and handle material and equipment in accordance with manufacturer's instructions.

2. Notify Engineer and Owner in writing upon acceptance of a shipment.

3. Promptly inspect shipments to assure that material and equipment comply with requirements, quantities are correct, and material and equipment are undamaged.

4. Furnish equipment and personnel to handle material and equipment by methods to prevent soiling, disfigurement, or damage.

5. Uncrate equipment and dispose of packing material properly.

C. Storage and Protection

1. Store and protect material and equipment in accordance with manufacturer's instructions, with seals and labels intact and legible. Store sensitive material and equipment in weather tight, climate controlled enclosures.

2. For exterior storage of fabricated material and equipment, place on sloped supports, above ground.

3. Provide for bonded off Site storage and protection when Site does not permit on Site storage or protection.

4. Cover material and equipment subject to deterioration with impervious sheet covering. Furnish ventilation to avoid condensation or potential degradation of material and equipment.

5. Store loose granular materials on solid flat surfaces in a well-drained area. Avoid mixing with foreign matter.

6. Furnish equipment and personnel to store material and equipment by methods to prevent soiling, disfigurement, or damage.

7. Arrange storage of material and equipment to permit access for inspection. Periodically inspect to assure material and equipment are undamaged and are maintained in acceptable conditions.

8. After receipt of material and equipment, assume responsibility for loss and damage including but not limited to breakage, corrosion, weather damage, and distortion.

1.04 WARRANTIES

A. Provide warranties for equipment and material in accordance with Paragraphs 6.19 and 14.03 of the Standard General and Supplementary Conditions, if any.

B. Provide extended or special warranties as indicated in individual Specification sections.

END OF SECTION

This page intentionally left blank

SECTION 01 70 00

EXECUTION AND CLOSEOUT REQUIREMENTS

PART 1 – GENERAL

1.01 SUMMARY

A. This Section specifies general execution requirements and startup/commissioning and performance testing for closeout of the Work and applies to all Specifications and Drawings

1. In certain Paragraphs, checked items indicate requirements applicable to the Project.

2. Provisions of this Section may be supplemented in the **Specific Project Requirements and Procedures** or other sections of Division 01.

B. Section Includes

1.02 OVERALL EXECUTION REQUIREMENTS
Coordination
Existing Conditions
Field Engineering
Record Documents
Cutting and Patching
Electrolytic Corrosion Prevention
Quality Assurance and Control of Installation
Manufacturers' Field Services
Independent Testing

1.03 STARTUP, TESTING, AND COMMISSIONING
Spare Parts
Consumables
Checkout and Starting Systems
Starting, Adjusting, and Balancing
Startup and Commissioning/Performance Testing
Demonstration and Training

1.02 OVERALL EXECUTION REQUIREMENTS

A. Coordination

1. Conduct preconstruction and pre-installation meetings before commencing certain Work that requires coordination or has special requirements or approvals.

2. Comply with the required Work sequence and coordination as may be specified in Summary of Work and reflect in the Project scheduling.

3. Coordinate Work such that Work is completed with minimum disruption to residents and businesses.

4. Coordinate space requirements and installation of Work. Utilize spaces efficiently to maximize accessibility for other installations, maintenance, and repairs.

5. Coordinate Work of the various Specifications with interdependent responsibilities for installing, connecting to, and placing in service, operating equipment.

6. Coordinate related Work at the Site in accordance with Article 7 of the Standard General and Supplementary Conditions, if any.

7. Coordinate completion and cleanup of Work of separate sections in preparation for Substantial Completion and for portions of Work designated for Owner's partial occupancy.

8. After Owner occupancy of premises, coordinate access to Site for correction of defective Work and/or incomplete Work to minimize disruption of Owner's activities.

☒ See the **Specific Project Requirements and Procedures** for additional requirements.

B. Existing Conditions

1. Paragraph 4.01 of the Standard General and Supplementary Conditions, if any, covers Availability of Lands.

   ☒ No information is identified or available for the Project.

   ☒ Information identified is included as an attachment to the **Specific Project Requirements and Procedures.**

2. Paragraph 4.02 of the Standard General and Supplementary Conditions, if any, covers Subsurface and Physical Conditions.

   ☒ No information is identified or available for the Project.

   ☐ Information identified is included as an attachment to the **Specific Project Requirements and Procedures.**

3. Pursuant to Paragraph 4.04 of the Standard General and Supplementary Conditions, if any, existence and location of Underground Facilities and other utilities and construction indicated as existing are not guaranteed. Before beginning Work investigate and verify the existence and location of Underground Facilities and other utilities and construction.

   ☐ Conduct test pits and other utility research and properly restore utilities interfered with or damaged during construction at no cost to the Owner.

   ☐ Engage a professional subsurface utility locator to verify the existence and location of underground utilities prior to starting Work

   ☒ See the **Specific Project Requirements and Procedures** for additional requirements.

4. Paragraph 4.05 of the Standard General and Supplementary Conditions, if any, covers Reference Points.

   ☒ No information is identified or available for the Project.

   ☐ Information is included in the **Specific Project Requirements and Procedures**.

5. Paragraph 4.06 of the Standard General and Supplementary Conditions, if any, covers Hazardous Environmental Conditions at Site.

   ☒ No information is identified or available for the Project.

   ☐ Information identified is included as an attachment to the **Specific Project Requirements and Procedures.**

☐ Other information is included as an attachment to the **Specific Project Requirements and Procedures**.

C. Field Engineering

☐ Delete - not required for the Project.

☒ Provide for the Project as follows.

1. Prior to initiating construction, engage an independent professional land surveyor registered in the state where the Project is located to provide surveys and permanent reference points for all bounds and property markers along the line of the Work that may be disturbed during construction. Submit copies of all ties to the bounds and property markers to the Engineer prior to excavation at the Site(s).

2. Maintain surveyor's log of control and other survey work. Keep log available for reference.

3. Verify layout information shown on the Drawings in relation to existing benchmarks before lay out of the Work. Locate and protect existing benchmarks and control points. Preserve permanent reference points during construction.

4. Promptly report lost or destroyed reference points, benchmarks, or control points. Promptly report requirements relocate reference and control points due to changes in grades. Promptly replace lost or destroyed bounds or markers and control points based on the original survey control points utilizing the services of a professional land surveyor registered in the state where the Project is located. The cost of replacing markers disturbed by the Contractor's operations shall be at the Contractor's expense.

☐ See the **Specific Project Requirements and Procedures** for additional requirements.

D. Record Documents

1. Provide Record Documents in accordance with Paragraph 6.12 of the Standard General and Supplementary Conditions, if any, and in accordance with the **Payment and Administrative Procedures**.

2. Store Record Documents separate from documents used for construction. Record information concurrent with construction progress.

3. Legibly mark each item to record description of actual equipment and material installed and actual construction on approved submittals, including the following.

   a. Manufacturer's name and equipment and material model and number

   b. Material and equipment substitutions or alternates utilized

   c. Approved changes

   d. Measured depths of foundations

   e. Measured horizontal and vertical locations of Underground Facilities and appurtenances, referenced to permanent surface improvements

   f. Measured locations of internal utilities and appurtenances concealed in construction, referenced to visible and accessible features of the Work

   g. Field changes of dimension and detail

   h. Details not on original Contract Documents or Shop Drawings

E. Cutting and Patching

1. Employ skilled and experienced personnel to perform cutting and patching.

2. Submit written request in advance of cutting or alteration which affects:

   a. structural integrity of any element of Project;

   b. integrity of weather exposed or moisture resistant elements;

   c. efficiency, maintenance, or safety element;

   d. safety, traffic, or hazard barriers;

   e. visual qualities of sight exposed elements; and

   f. work of Owner or separate contractor.

3. Execute cutting, fitting, and patching including excavation and fill to complete Work and to:

   a. fit materials together, to integrate with other work;

   b. uncover Work to install ill-timed Work;

   c. remove and replace defective or non-conforming Work;

d. remove Samples of installed Work for testing when requested; and

e. provide openings in element of Work for penetration of mechanical and electrical work.

4. Execute Work by methods to avoid damage to other work and which will provide appropriate surfaces to receive patching and finishing.

5. Provide adequate temporary support for Work to be cut.

6. Restore Work with new materials in accordance with requirements of Contract Documents. Use materials identical with original materials where recognized that satisfactory results can be produced.

7. Provide protection from elements for areas which may be exposed by uncovering work.

8. Refinish surfaces to match adjacent finishes. For continuous surfaces, refinish to nearest intersection or natural break. For an assembly, refinish entire unit. Restore exposed finishes of patched areas; and, where necessary extend finish restoration onto retained adjoining Work in a manner, which will eliminate evidence of patching.

9. Identify any Hazardous Waste, Hazardous Environmental Condition, or hazardous substance exposed during the Work to Owner for decision or remedy in accordance with Paragraph 4.06 of the Standard General and Supplementary Conditions, if any.

10. Cut work by methods least likely to damage Work to be retained and work adjoining. Cut Work with sawing and grinding tools, not with hammering, chopping, or burning tools. Cut masonry and concrete materials with masonry saw or core drill. Do not use pneumatic tools without prior approval. Core drill openings through concrete Work. Adhere to mandatory cutback requirements when saw cutting concrete and roadway openings.

11. Do not cut and patch structural Work in a manner resulting in reduction of load-carrying capacity or load/ deflection ratio.

12. Fit Work tight to pipes, sleeves, ducts, conduit, and other penetrations through surfaces. Maintain supports to ensure structural integrity of the Work. Provide devices and methods to protect other portions of Project from damage and seal voids. For interior work at penetrations of fire rated walls, partitions, ceiling, or floor construction, completely seal voids with fire resistant material, to full thickness of the penetrated element.

13. Do not cut and patch operational or safety-related components that reduce capacities to perform in manner intended. Do not cut and patch Work that reduces visual qualities. Remove and replace unsatisfactory cutting patching as directed by Engineer or Owner.

F. Electrolytic Corrosion Prevention

1. Prevent galvanic action, bimetallic corrosion, anodic or cathodic action, and electrolysis at all electrical grounds and for all galvanic scale (electromotive series or table of oxidation potentials). Do not allow contact of dissimilar metals further apart than 0.35 on the galvanic scale (electromotive series or table of oxidation potentials). The electrode potential of common metals is listed below.

	Electrode Potential Volts (Relative to Hydrogen)
Magnesium	+2.37
Aluminum	+1.70
Zinc+	+0.76
Chromium	+0.56
Iron and Steel	+0.44
Cadmium	+0.40
Nickel	+0.25
Tin	+0.14
Lead	+0.13
Copper	-0.34

2. Unless otherwise indicated, provide dielectric insulators between ferrous and nonferrous pipe and equipment.

G. Quality Assurance and Control of Installation

1. Monitor quality control of Subcontractors, Suppliers, manufacturers, material, equipment, services, Site conditions, and workmanship, to produce Work of specified quality. Conduct field quality control and testing specified.

2. Comply fully with manufacturers' installation instructions, including each step in sequence. If manufacturers' instructions conflict with Contract Documents, request clarification from Engineer before proceeding.

3. Comply with specified standards as a minimum quality for the Work except when more stringent tolerances, codes, or specified requirements indicate higher standards or more precise workmanship.

4. Perform Work using persons qualified to produce workmanship of specified quality.

5. Install field Samples and mockups at the Site as required in Specifications for review. Acceptable Samples and mockups represent a quality level for the Work. Where field Sample or mockup is specified to be removed, clear area after field Sample or mockup has been accepted by Engineer or after Work is complete when mockup is to serve as a control reference.

6. Protect adjacent construction in accordance with Paragraph 6.11 of the Standard General and Supplementary Conditions, if any.

H. Manufacturers' Field Services

1. If required in the Specifications, arrange and pay for material or equipment Suppliers or manufacturers to provide qualified staff personnel (field representative) to perform the following services and services specified. Submit reports of activities, actions taken and test results to Engineer within 10 days of completion.

   a. Observe Site conditions, conditions of surfaces and installation, quality of workmanship.

   b. Report observations and Site decisions or instructions given to applicators or installers that are supplemental or contrary to manufacturers' written instructions.

   c. Assist with field assembly as required.

   d. Furnish, setup, and operate required test equipment and facilities.

   e. Perform and record results of manufacturer recommended inspections and tests, and tests specified for material and equipment.

   f. Be responsible for protection of material and equipment and safety of all personnel during testing.

   g. Perform any other services normally provided by field representative's company.

   h. Instruct operating personnel in proper use of material and equipment.

   i. Instruct and supervise field repairs before acceptance by Owner.

I. Independent Testing

1. Employ and pay for specified services of an independent firm in accordance with Paragraph 13.03 of the Standard General and Supplementary Conditions to perform inspection and testing as may be specified except where responsibility for a specific inspection or test is expressly allocated to Owner in the Specifications or by Laws and Regulations.

2. Reports will be submitted by the independent firm to Owner, in duplicate indicating observations and results of tests and indicating compliance or noncompliance with Contract Documents.

3. Inspection, testing, and source quality control may occur on or off the Project Site.

4. Cooperate with independent firm. Furnish samples of materials, design mix, equipment, tools, storage and assistance as requested.

5. Notify Owner and independent firm 24 hours before expected time for operations requiring services.

6. Make arrangements with independent firm and pay for additional Samples and tests required for Contractor's use.

7. Retesting required because of nonconformance to specified requirements will be performed by the same independent firm if instructed by Owner. Payment for retesting will be charged to Contractor by deducting inspection or testing charges from the Contract Price.

8. Testing or inspecting does not relieve Contractor from performing Work in accordance with requirements of the Contract Documents.

1.03 STARTUP, TESTING, AND COMMISSIONING

A. Spare Parts

1. Provide spare parts required for construction, startup, testing and commissioning of the Work prior to achievement of Substantial Completion, including spare parts for flushing and consumable supplies such as bolts, nuts, gaskets, filters, insulating tape, etc., normally consumed in the startup, commissioning and testing.

2. If spare parts are purchased by Owner, Contractor shall have the right to use the spare parts purchased by Owner provided that such spare parts are replaced prior to Substantial Completion at Contractor’s expense. Replacement spare parts, replaced by Contractor, shall be new, unused and identical as the original spare part used.

B. Consumables

1. Provide initial fills of consumables including equipment lubricants, resins, chemicals, desiccants, and fuels. Provide subsequent fills if required during Warranty Period if acts or omissions of Contractor cause such consumables to require replacement.

2. Coordinate with Owner for consumables required.

C. Checkout and Starting Systems

1. Coordinate schedule for startup and operation of various equipment and systems with Owner.

2. Notify Owner 7 days before startup of each major piece of equipment or system, including a staffing request for Owner's operations and maintenance personnel required to adequately and safely support each specific start-up and operation activity.

3. Verify that each system or piece of equipment item has been assembled, constructed, or completed in accordance with the Contract and capable of functioning as intended.

4. Verify that each piece of equipment or system has been checked for proper lubrication, drive rotation, magnetic center alignment, belt tension, control sequence, or other conditions which may cause damage.

5. Verify that each piece of equipment or system has successfully completed construction testing and cold commissioning, including hydrostatic testing, loop checks, relay checks, calibration, and continuity checks and that all tests, meter readings, and specified electrical characteristics agree with those required by the equipment or system manufacturer.

6. Verify wiring and support components for equipment are complete and tested.

7. Execute start up under supervision of responsible manufacturers' representative or Contractor's personnel in accordance with manufacturers' instructions utilizing Owner's qualified operations and maintenance staff trained by Contractor.

8. When specified in individual Specification Sections, require manufacturer to provide field representative to be present at Site to inspect, check and approve equipment or system installation before start up, and to supervise placing equipment or system in operation.

D. Adjusting and Balancing

1. Supply necessary equipment, material, construction power, and consumables (except for those provided by Owner) needed to startup and fully test the Work and replenish the same until Substantial Completion is achieved. Contractor may utilize Owner's operating spare parts, such use requiring timely replacement at Contractor's expense.

2. Coordinate as required for conduct of independent testing.

3. Perform specified and required adjusting and balancing concurrently to the maximum extent possible on individual equipment and systems and prior to startup and commissioning/performance testing.

E. Startup and Commissioning/Performance Testing

1. Conduct startup and commissioning/performance tests to demonstrate the Work meets the requirements of the Contract Documents, satisfies the Owner's requirements, and is in accordance with Paragraph 14.04. of the Standard General and Supplementary Conditions, if any. Conduct testing in accordance with

   ☒ individual Specification sections.

   ☐ the separate Startup, Commissioning, and Testing section.

   ☐ the **Specific Project Requirements and Procedures.**

2. Prepare and submit a written startup and commissioning/performance testing procedures no later than 60 days prior to start of testing for review and final test procedures no later than 30 days prior to start of testing. Submit a staffing request for Owner's operations and maintenance personnel.

3. Calibrate test equipment and instrumentation on Site or provide acceptable certificate of calibration conducted within 30 days of testing.

4. Complete functional testing prior to initiating the startup and commissioning/performance testing as specified.

5. Complete specified startup and commissioning/performance tests prior to Substantial Completion. Owner and Engineer will witness Performance Testing. Notify Owner and Engineer in writing at least 7 days prior to starting any startup and commissioning/performance testing. Coordinate for witnessing of tests by required regulatory representatives.

6. Submit written test reports.

F. Demonstration and Training

1. Provide formal demonstration and training of Owner's personnel as specified in

☒ individual Specification sections.

☐ the separate Demonstration and Training section.

☐ the **Specific Project Requirements and Procedures.**

END OF SECTION

SECTION 02 41 14

SELECTIVE DEMOLITION FOR EARTHWORK

PART 1 – GENERAL

1.01 SUMMARY

A. Section includes

1. Site demolition including clearing, grubbing, stripping and/or ordinary excavation of existing bituminous or cement concrete pavements, soils, foundations, bituminous or cement concrete curbs, bituminous or cement concrete sidewalks, grassed areas, demolition, dismantling, replacement/restoration Work, stacking of reusable and disposal of waste/surplus materials and tree protection and removal in accordance with this Section and applicable reference standards listed in Article 1.03.

1.02 PRICE AND PAYMENT PROCEDURES

A. Measurement and payment requirements: per Division 01 General Requirements.

1.03 REFERENCES

A. CTDOT Standard Specifications for Roads, Bridges, and Incidental Construction

B. CTDOT Standard Drawings

1.04 ADMINISTRATIVE REQUIREMENTS

A. Coordination, Sequencing, and Scheduling: per Division 01 General Requirements.

1.05 SUBMITTALS

A. Submit in accordance with Division 01 General Requirements.

1. Submit proposed methods and disposal Plans for demolition to Owner and Engineer for review prior to start of Work as specified.

2. Submit schedule indicating proposed sequence of demolition to Owner and Engineer for review prior to start of Work. Include coordination for shutoff, capping, and continuation of utility services as required, together with details for dust and noise control protection.

3. Submit proper documentation that all lead based paint and Asbestos containing materials have been properly disposed of. Submit documentation to Owner and Engineer promptly after demolition of each structure.

B. Closeout and Maintenance Material Submittals: per Division 01 General Requirements.

1.06 QUALITY ASSURANCE

A. Provide in accordance with Division 01 General Requirements.

B. Protect existing trees and other vegetation indicated to remain in place, against unnecessary cutting, breaking or skinning of roots, skinning and bruising of bark, smothering of trees by stockpiling construction materials or excavated materials within drip line, excess foot or vehicular traffic, or parking of vehicles within drip line. Provide temporary guards to protect trees and vegetation to be left standing.

C. No trees, plants, shrubs, flowers or vegetables shall be removed or trimmed without the prior permission of the Engineer, except where otherwise specified.

1.07 DELIVERY, STORAGE, AND HANDLING

A. Provide in accordance with Division 01 General Requirements.

1.08 SITE CONDITIONS

A. Existing Conditions: per Division 01 General Requirements.

PART 2 – PRODUCTS (NOT USED)

PART 3 – EXECUTION

3.01 GENERAL

A. Perform selective Site demolition in accordance with the applicable state standards and the Drawings.

B. Comply with the General Requirements for temporary construction controls and protections and waste disposal.

1. Ensure against damage or injury to buildings, occupants, and adjacent property from falling debris or other causes. Avoid damage to adjacent areas, facilities, and appurtenances.

2. Maintain free and safe passage to and from the Site.

3. Legally dispose of waste, surplus and unsatisfactory materials including bituminous/cement concrete, debris, rails and ties, common excavation, cold planing, and reclamation, immediately as it accumulates during the course of the clearing, grubbing, stripping, demolition, and other Site preparation. Burying is not allowed.

C. Perform selective demolition Work in a systematic manner. Use such methods as required to complete Work indicated on Drawings or as specified in accordance with demolition schedule and applicable Regulations.

D. Limit the area of disturbance to the minimum area possible to allow for the proper installation of the Work and to preserve all plantings, trees, shrubs, grass and natural vegetation to the maximum possible extent.

E. Provide services for effective air and water pollution controls; water sprinkling, temporary enclosures, and other suitable methods to limit dust and dirt rising and scattering in air to lowest practical level. Comply with governing Regulations, permits, Laws, and ordinances pertaining to environmental protection.

F. Completely fill below grade areas and voids resulting from demolition Work. Provide fill materials as shown on the Drawing or as specified in Section 31 00 00, Earthwork.

3.02 PREPARATION

A. Notify and accompany Engineer through the Site to inspect the items that are to be trimmed, removed, and replanted prior to start of the Work. The Contractor shall only remove those trees indicated on the Plans.

B. Mark all trees, plantings and other objects that are to be removed, trimmed, cut, or removed and preserved. Do not remove or trim unmarked items unless approved by Engineer.

C. Protect existing trees and other vegetation indicated to remain in place, against unnecessary cutting, breaking or skinning of roots, skinning and bruising of bark, smothering of trees by stockpiling construction materials or excavated materials within drip line, excess foot or vehicular traffic, or parking of vehicles within drip line. Provide temporary guards to protect trees and vegetation to be left standing.

D. Protect existing objects not indicated to be removed. Avoid interference with the use of, and passage to and from, adjacent buildings, facilities, driveways, walks, drainage systems and road.

E. Saw-cut pavements required to be removed in advance, including highways, driveways and walks, but do not remove until the Work is ready to be installed.

F. Do not remove highway signs, guardrails, and other control safety and warning devices until just prior to the installation of the Work.

G. Do not remove fences until the property Owners affected are notified at least 4 days in advance. Do not remove fencing more than 48 hours in advance unless written permission from property Owner is received.

H. Leave items affecting traffic, safety, lives and the containment of humans and animals and essential to the protection of property or the operation of a business in place as long as possible and replace as soon as possible when such items must be removed.

3.03 SITE DEMOLITION

A. Clear the Site of construction debris and waste materials, including grass, bushes, trees, broken concrete, pipes, lumber and steel pieces, rags and plastics, within the limits of Work as shown on the Drawings or as directed.

B. Strip and/or excavate existing bituminous or cement concrete pavements, soils, foundations, bituminous or cement concrete curbs, bituminous or cement concrete sidewalks, grassed areas.

C. Remove and stockpile letter boxes, signs and poles and other usable materials to be reinstalled.

D. Demolish and remove existing bituminous pavement, bituminous and concrete walkways and curbing, grass borders and landscaping, bushes, shrubs, trees and vegetation as necessary to construct the site and drainage improvements. Remove existing obstructions and debris, cut trees, bushes, root stumps, waste stones, wood, lumber, metal, plastic, and other unsuitable materials above, at or below grade that may interfere with or obstruct the new Work, whether or not shown on the Drawings.

E. Remove and stockpile top soil, vertical granite curbs and curb stones, utility castings and other materials for reuse as shown or as directed by the Engineer.

F. Stockpile recovered materials acceptable to the Engineer to be reused on the Project and protect against damage or deterioration.

G. Do not cut, remove, destroy or trim trees and shrubs unless specifically marked or permitted. Do not remove tree branches using excavating equipment. Provide that required trimming is performed by a licensed arborist.

1. Remove, store, and protect trees designated on the Drawings per CTDOT Standards.

2. Protect trees or vegetation outside the limits of the Work area.

3. Tree Removal

a. Cut existing trees and expose by excavation, remove and/or cut, as required, the tree stumps and root systems as shown on the drawings and as directed. Remove and dispose of tree stumps, roots, organic matter and unsuitable materials resulting from the operation.

b. Excavation around tree: not to exceed the width of the sidewalk.

c. Depth of excavation for stump removal: not to exceed 5 feet.

d. Depth of excavation for removal of a tree root system: not to exceed 2 feet.

e. Cut clean and remove root system encountered within the limits of sidewalk width as determined by the Engineer. Paint cut surfaces of the remaining detached roots with stump rot. Clean and paint tree roots still attached to the trunk with two coats of an approved chemical root guard to protect the tree from later damage.

f. Transport and carefully stack existing tree grates in good condition and not needed for the Project at the DPW yard or dispose of at no additional cost to the Owner, as directed by Engineer.

H. Protect integrity of remaining structures, appurtenances and equipment during demolition, removal and alteration to existing structures, appurtenances, utility pipes, castings, fences, walkways, posts, stairs and other physical features.

I. Maintain slopes longitudinally and laterally to ensure proper and continuous drainage. Field adjust sidewalk and roadway gutter grades at driveways and side street intersections to be consistent with the existing drainage pattern and provide for an appropriate transition between the new and the existing (side streets and driveways) pavement surfaces at intersections.

J. If cobblestones are encountered, carefully stack the excavated cobblestone at the Town's DPW Yard at no additional cost to the Town.

K. Leave abandoned underground piping in place, plug or cap and fill with flowable control density fill. Remove or cut abandoned underground piping castings a minimum 12 inches below the finished surface and the area backfilled.

L. Cut sections of piping to be removed to the nearest solid support or provide appropriate new supports and cap each of the remaining ends before backfilling unless noted on the Drawings or specifically directed by the Engineer.

M. Cut openings in existing masonry work to provide for a suitable bond, and clean, square and plumb openings for installation of new Work. Thoroughly clean cut surfaces of loosened materials.

3.04 SAWCUTS IN EXISTING PAVEMENTS AND SIDEWALKS

A. Neatly saw-cut edges of excavations in existing pavements and sidewalks along either a straight line or design curved line as shown in the Drawings. Ragged, uneven edges are not acceptable.

B. Saw cut existing pavement through its full depth, or to the elevation of the abutting proposed pavement subgrade, whichever is lesser, at joints between existing and proposed pavements, and at utility trenches through existing pavement to remain,

to provide a uniform, vertical surface for the proposed pavement joint with the existing pavement.

C. Neatly saw cut edges that become broken, ragged or undermined with a minimum disturbance to remaining pavements or sidewalks prior to the placement of abutting proposed pavement.

D. Spray or paint saw cut surfaces with a uniform thin coat of RS-1 asphalt emulsion immediately before placement of hot mix asphalt material against the surface.

3.05 PIPE CORING

A. Core holes for all pipe protrusions through existing concrete structures to allow watertight installation of pipe and link seal or pipe sleeve as required. Double link seals shall be installed at all pipe protrusions through concrete walls containing liquid or saturated conditions on either side.

3.06 DISPOSAL OF DEMOLISHED MATERIALS

A. Remove from Project Site, debris, rubbish, and other materials resulting from demolition operations. Do not remove from Project Site without prior permission by Owner or Engineer. Store all demolished materials that Owner wishes to retain at location designated by Owner or Engineer.

B. Burning of removed materials from demolished structures will not be permitted on Site.

C. Dispose of demolition debris in a lawful manner.

D. Management of hazardous materials not specifically identified in this Specification shall be extra Work. This provision does not relieve Contractor of his responsibility to respond promptly and appropriately to indications of hazardous material.

E. In the event that unanticipated hazardous materials are discovered or suspected, Contractor shall carry out suitable measures to minimize hazards and immediately report conditions to Engineer.

3.07 REPAIR, REPLACEMENT AND RESTORATION

A. Match materials of repair and/or restoration to existing adjacent surfaces in finish and texture as closely as possible. Make joints between new and existing Work inconspicuous.

B. Replace or restore items damaged, dislocated and/or dismantled such as walls, fences, lamp posts, letter boxes, masonry boundary walls, Town signs, poles, bollards, curb stones, markers, trees, bushes, grassed areas, walkways, stairs/steps, benches, outside lighting and other amenities and physical features designated to remain, to conditions that existed prior to the start of construction.

3.08 CLEAN-UP

A. Contractor shall remove from the Site, all debris resulting from the demolition operations as it accumulates. Upon completion of the Work, all materials, equipment, waste, and debris of every sort shall be removed and premises shall be left, clean, neat, and orderly.

3.09 FIELD QUALITY CONTROL

A. Provide in accordance with Division 01 General Requirements.

3.10 CLOSEOUT ACTIVITIES

A. Provide in accordance with Division 01 General Requirements.

END OF SECTION

SECTION 03 41 01

PRECAST CONCRETE CULVERT AND TRANSITION STRUCTURE

PART 1 – GENERAL

1.01 SUMMARY

A. Section Includes

A. Provide a precast concrete box structure with interior dimensions of 2' high, 6.5' wide and approximately 90' in length; an 8' by 8' square transition structure; and a precast headwall and wingwalls at the outlet end as shown on the drawings and in accordance with this Section, the applicable reference standards listed in Article 1.03 and the Drawings.

B. The excavation of the existing inland wetland and removal and disposal of all unsuitable material within the footprint of the proposed culvert, as necessary.

C. Installing precast concrete box culvert, precast concrete headwall, transition structure, footings, excavation, bracing, backfill, grading, regrading, backfill material, subbase material and loam.

D. Temporary sheet piling, dewatering and diversion of the stream and necessary flow control measures during construction, field verification of dimensions and grades, erosion and sedimentation control including turbidly curtain to complete construction of the culvert as shown on plans and as directed by the Engineer.

1.02 PRICE AND PAYMENT PROCEDURES

A. Measurement and payment requirements: per Division 01 General Requirements.

1.03 REFERENCES

A. Reference Standards

A. American Association of State Highway and Transportation Officials (AASHTO)

a. AASHTO HB-17 Standard Specifications for Highway Bridges

b. AASHTO T 111 Standard Method of Test for Mineral Matter or Ash in Asphalt Materials

B. ASTM International (ASTM)

a. ASTM A48/A48M Standard Specification for Gray Iron Castings

b. ASTM A615/A615M Standard Specification for Deformed and Plain Carbon-Steel Bars for Concrete Reinforcement

c. ASTM A1064/1064M Standard Specification for Carbon-Steel Wire and Welded Wire Reinforcement, Plain and Deformed, for Concrete

d. ASTM C32 Standard Specification for Sewer and Manhole Brick (Made from Clay or Shale)

e. ASTM C33/C33M Standard Specification for Concrete Aggregates

f. ASTM C144 Standard Specification for Aggregate for Masonry Mortar

g. ASTM C150/C150M Standard Specification for Portland Cement

h. ASTM C207 Standard Specification for Hydrated Lime for Masonry Purposes

i. ASTM C260/C260M Standard Specification for Air-Entraining Admixtures for Concrete

j. ASTM C478 Standard Specification for Precast Reinforced Concrete Manhole Sections

k. ASTM C494/C494M Standard Specification for Chemical Admixtures for Concrete

l. ASTM C857 Standard Practice for Minimum Structural Design Loading for Underground Precast Concrete Utility Structures

m. ASTM C890 Standard Practice for Minimum Structural Design Loading for Monolithic or Sectional Precast Concrete Water and Wastewater Structures

n. ASTM C990 Standard Specification for Joints for Concrete Pipe, Manholes and Precast Box Sections Using Preformed Flexible Joint Sealants

o. ASTM D113 Standard Test Method for Ductility of Bituminous Materials

p. ASTM D1227 Standard Specification for Emulsified Asphalt Used as a Protective Coating for Roofing

q. ASTM D4 Standard Test Method for Bitumen Content

r. ASTM D6/D6M Loss on Heating of Oil and Asphaltic Compounds

s. ASTM D71 Standard Test Method for Relative Density of Solid Pitch and Asphalt (Displacement Method)

C. Federal Specifications (FED)

a. FED SS-S-210A Sealing Compound, Preformed Plastic, for Expansion Joints and Pipe Joints

1.04 ADMINISTRATIVE REQUIREMENTS

A. Coordination, Sequencing, and Scheduling: per Division 01 General Requirements.

1.05 SUBMITTALS

A. Submit in accordance with the Division 01 General Requirements.

B. Shop Drawings

A. Precast Concrete Structures, including construction details, dimensions, reinforcement, placement, openings, wing walls/head walls, anchoring, cut off walls, and other supporting documentation deemed necessary by the Engineer, stamped by a structural professional engineer licensed in the state of Connecticut.

C. Product Data

A. Joint Sealant

B. Anchorage Hardware

C. Streambed Construction

D. Any other appurtenant data.

D. Design Data

A. Structural design calculations sealed by a professional Engineer licensed in the state of Connecticut, and submitted a minimum of 2 weeks prior to scheduled manufacture. These will be reviewed for consistency with Project intent.

B. Closeout and Maintenance Material Submittals: per Division 01 General Requirements.

E. Stream Bypass

F. 1. Plans, sequencing and supporting documentation describing the means and methods to be used to bypass stream flow during construction.

1.06 QUALITY ASSURANCE

A. Provide in accordance with Division 01 General Requirements.

B. The materials covered by this Specification are intended to be standard materials of proven ability as manufactured by reputable concerns. Materials shall be designed and constructed in accordance with Industry Practice, and shall be installed in accordance with the manufacturer's recommendations. The Specifications call

attention to certain features, but do not purport to cover all details entering into the construction of the materials.

1.07 DELIVERY, STORAGE, AND HANDLING

A. Provide in accordance with Division 01 General Requirements.

B. Products shall be shipped, stored, and handled in a manner consistent with the written recommendations of the manufacturer so as not to degrade quality, serviceability, and appearance. Any unit found to be defective, either before or after installation, shall be removed from the Project Site and replaced with a sound unit.

C. The manufacturer shall furnish at no additional expense to the Owner, the services of the respective manufacturer's representatives of the precast concrete units, for such lengths of time as may be necessary to properly instruct the Contractor's personnel in the proper handling, installation, and jointing of the precast concrete units in accordance with the printed recommendations of the manufacturer.

1.08 SITE CONDITIONS

A. Existing Conditions: per Division 01 General Requirements.

PART 2 – PRODUCTS

2.01 PRECAST CONCRETE STRUCTURES

A. General

A. Precast structures shall have the inside dimensions as shown on the Drawings. Interior dimensions of the boxed culvert shall be 2' high by 6.5' wide, with a clear span. Sections shall be minimum 8' in length unless a different length is required in accordance with the design or manufacturer's recommendations.

B. Each culvert section shall be monolithically cast, with metal or metal faced forms, as a four-sided box section with open ends. The inside surfaces of the culvert shall be smooth with 45° chamfered fillets monolithically cast in all four inside corners. The quality of materials, the process of manufacture and the finished box sections shall be subject to inspection by the Engineer.

C. Where required, preformed joint filler shall be glued to the concrete surface by means of an adhesive in accordance with the manufacturer's recommendations. The adhesive shall be in accordance with AASHTO-M220.

D. All areas indicated in the drawings to be grouted shall be made with a non-shrinking, nonmetallic grout. The concrete surface shall be cleaned and roughened; and then shall be kept continuously moist for 24 hours

immediately prior to the application of grout to prevent flash setting. Grout shall be kept moist for a period of seven days.

E. Non-shrink grout for filling the voids between the opening in the precast box culvert section and fastening systems for curtain walls and copings shall be "Non-Corrosive Five Star Grout", made by U.S. Grout Corp., Old Greenwich Connecticut; Master Flow 713 grout made by Master Builders, Cleveland, Ohio; F-100 Grout made by Sauereisen Cements Co., Pittsburgh, Pennsylvania; Upcon made by Upco Co., Cleveland, Ohio. or an approved equal.

B. Precast Materials

A. Concrete

a. Concrete compressive strength shall be 5,000 psi after 28 days.

b. Minimum concrete thickness shall be 6 inches.

c. Portland cement shall be Type II conforming to ASTM C150/C150M.

d. Fine aggregate shall consist of natural sand conforming to ASTM C33/C33M.

e. Coarse aggregate shall consist of 1/2-inch maximum, well-graded crushed stone conforming to ASTM C33/C33M.

f. Air entrainment admixture shall conform to ASTM C260/C260M. The air-entrained content shall be not less than 4 percent or greater than 7 percent.

g. A super plasticizer shall be used and shall conform to ASTM C494/C494M Type F. Concrete shall be placed at a slump of between 5 and 8 inches.

B. Reinforcement

a. Wire fabric shall conform to the requirements of ASTM A1064/1064M.

b. Reinforcing bars shall be new billet steel, deformed, conforming to the requirements of ASTM A615/A615M, Grade 60.

c. Minimum clear concrete cover to reinforcement shall be 1-1/2 inches.

C. Design Loads

A. Vehicle Loads

a. Except as otherwise specified, the design shall meet the requirements of AASHTO HB-17, including a HL-93 vehicle load.

b. A lateral vehicle surcharge load of 125 psf shall be applied.

B. Lateral Pressure

a. The equivalent lateral fluid pressure shall be 100 psf/lf below flood or design groundwater elevation, and 60 psf/lf above such elevation. The specified lateral vehicle surcharge load shall be added to this load.

C. Water & Wastewater Structures Design Load

a. Except where higher loads are specified, water and wastewater structures shall be designed for the loads prescribed in ASTM C890.

D. Utility Structures Design Load

a. Except where higher loads are specified, utility structures shall be designed for the loads prescribed in ASTM C857.

D. Joints

A. Concrete sections shall be provided with bell and spigot, or tongue-in-groove ends to ensure proper connection of the joints.

B. Each joint shall be sealed with a butyl rubber sealant. A compatible primer shall be applied as recommended by the manufacturer. Sealant shall be Conseal CS-102 (CS-202 when the temperature during installation is less than 30 degrees F) by Concrete Sealants, Inc., Kent Seal #2 by Hamilton Kent, Pro-Stik by Press-Seal Gasket Corporation, or approved equal, and shall be applied in accordance with the manufacturer's recommendations. Sealant properties shall be as follows

a. AASHTO T 111: 30 percent minimum ash content

b. ASTM C990

c. ASTM D4: 50 percent minimum hydrocarbon content

d. ASTM D6/D6M: 2 percent maximum volatile matter

e. ASTM D71: specific gravity between 1.15 - 1.50

f. ASTM D113: 5.0 minimum

g. ASTM D217: 55-100 mm at 77 degrees F

h. FED SS-S-210A: No deterioration, no cracking and no swelling after 30 days immersion in 5 percent solutions of HCl, H2SO4, NaOH, KOH, and H2S.

2.02 DAMPPROOFING

A. Dampproofing shall be Hydrocide 700 Mastic as made by Sonneborn, Karnak 920 Anti Hydro Mastic Emulsion, or approved equal, conforming to ASTM D 1227.

2.03 PIPE CONNECTIONS

A. Pre-molded elastomeric sealed joints shall be used at the joints between the pipe and precast sections. Pre-molded elastomeric sealed joints shall be A-Lok, Res-Seal, Press-Wedge II, Lock Joints Flexible Manhole Sleeve, Kor-N-Seal Joint Sleeve, or equal.

2.04 BRICK

A. Brick shall conform to ASTM C32/C32M, and shall be new, first quality, whole, sound brick.

B. Grade MS brick shall be used for setting manhole frames.

2.05 MORTAR

A. Mortar shall be composed of one part portland cement and 2 parts sand with 20 percent hydrated lime.

B. Portland cement shall conform to ASTM C150/C150M. Sand shall conform to ASTM C144/C144M. Hydrated lime shall conform to ASTM C207/C207M.

2.06 ANCHORAGE HARDWARE

A. Hardware for fastening the precast structure to fasten precast segments together for buoyancy shall be stainless steel.

2.07 SOURCE QUALITY CONTROL

A. Provide in accordance with Division 01 General Requirements.

PART 3 – EXECUTION

3.01 DEWATERING AND STREAM BYPASS

A. Prevent surface water and subsurface or groundwater from flowing into excavations and from flooding project site and surrounding area.

B. Do not allow water to accumulate in excavations. Remove water to prevent softening of foundation bottoms, undercutting foundations, and soil changes detrimental to stability of subgrades and foundations. Provide and maintain pumps, sumps, suction and discharge lines, and other dewatering system components necessary to convey water away from excavations.

C. Dispose of water in accordance with the requirements of all local, State and Federal codes and in accordance with Project dewatering permits.

D. Maintain stream flow at all times during construction. Contractor shall be responsible for means and methods.

3.02 PRECAST STRUCTURES

A. Precast structures shall be installed as shown on the Drawings. Precast sections shall be installed so that the entire structure is vertically plumb and aligned, and when not so, shall be removed and replaced. All erection holes shall be filled solid with non-shrink grout. The Contractor shall furnish and use suitable slings, hooks, and cables for the proper handling of the sections. All anchoring and fastening devices shall be provided by the Manufacturer for the proper and satisfactory installation of the units

B. The manufacturer shall supply all specific lifting devices for each piece to the successful installation contractor if needed on a temporary basis. The specific lifting devices shall be returned with the manufacturer representative that oversees the installation work for compliance

C. No cracked, warped, or broken units, or units which, in the opinion of the Owner or Engineer, show defects that might adversely affect the serviceability of the units, shall be used in the work. Defective units shall be removed from the site and shall be replaced by the Manufacturer with new and sound units at no additional expense to the Owner. Any additional costs associated with replacement of units as described in this section shall be the manufacturers responsibility to pay all costs associated with replacement of said units

D. Joints between precast sections and units shall be made in an approved manner to guarantee a leak-proof, watertight joint. Joint designs incorporating 0-rings and cement grout will not be accepted. Joint filler shall be provided as required and joint sealant shall be installed on both the interior and exterior sides of the joints. Joints shall be sealed with either cold-applied bituminous sealer, preformed plastic gaskets or flexible, watertight, rubber-type gaskets conforming to the requirements of Article M.08.01 of the CTDOT Specifications for Roads, Bridges, and Incidental Construction.

E. Where patching is permitted by the Owner and Engineer, the patches shall be made using the same material as used in the unit being patched and using a 2-part epoxy compound of a type to produce a proper bonding of the patch to the units.

F. Patching required due to damage during offloading staging or installation shall be responsibility of the Contractor.

G. Patching of imperfections at the plant by the Manufacturer shall require the Owner's and Engineer's approval before the unit is shipped from the manufacturer's plant.

H. The engineer reserves the right to reject any precast sections and the rejected units shall be tagged and removed from the site immediately. The engineer may also require testing of concrete

I. Packing, Shipping, Handling, and Unloading

1) Provide that each shipment of precast concrete headwalls and culverts includes manufacturers' Certificate of Conformance

2) Inspect upon delivery and reject pipe immediately that does not conform to the specified requirements or has been damaged beyond repair and immediately remove from Site

J. The manufacturer shall furnish at no additional expense to the Owner, the services of the respective manufacturer's representatives of the precast concrete units, for such lengths of time as may be necessary to properly instruct the Contractor's personnel in the proper handling, installation, and jointing of the precast concrete units in accordance with the printed recommendations of the manufacturer. The manufacturer shall witness the complete installation of the box culverts, headwalls and certify they have been installed in accordance with the manufactures recommendations for the supplied products and ancillary items.

K. All precast concrete units shall be stored, handled, protected and delivered by the manufacturer to be installed and unloaded by the Contractor. The manufacturer shall be present to verify that all supplied units are installed in accordance with the printed recommendations of the manufacturer and in a manner to prevent overstressing, marring or damaging of the units. The manufacturer shall provide a written affidavit that they witnessed and approved the installation means and methods according to the manufactures recommendations

L. The Contractor shall be responsible for any damage to the existing utilities and properties adjacent to the proposed headwalls and culvert. Such damages shall be repaired by the Contractor to the satisfaction of the Engineer at no additional cost.

M. The Contractor shall be responsible for protecting the precast culverts against flotation or uplift during construction and shall be designed for buoyance resistance.

N. The precast concrete culvert section shall be shipped, handled, and installed in accordance with the manufacturer's recommendations. Unless otherwise directed by the Engineer, all precast concrete culvert sections shall be installed in bedding material in accordance with the details as shown in the plans and in conformance with these specifications. The precast concrete box culverts shall be placed in the dry.

3.03 APPLICATION OF DAMPPROOFING

A. Application of dampproofing shall be in accordance with the manufacturer's recommendations.

B. Application shall not be permitted in spaces exposed to inclement weather or when air temperatures are below 40 degrees F, or are expected to go below 40 degrees F within 24 hours after application.

C. Apply dampproofing at a rate of 4 to 6 gallons per 100 square feet. If applying 2 coats, each coat shall be 2 to 3 gallons per 100 square feet. First coat must be allowed to dry prior to the application of the second coat. Coating must be continuous and free from breaks and pinholes.

3.04 FIELD QUALITY CONTROL

A. Provide in accordance with Division 01 General Requirements.

3.05 CLOSEOUT ACTIVITIES

A. Provide in accordance with Division 01 General Requirements.

3.06 CLEANING

A. Upon completion of all construction, and prior to final acceptance, all debris shall be removed from precast structures.

END OF SECTION

SECTION 10 14 00

SIGNAGE

PART 1 – GENERAL

1.01 SUMMARY

A. Section Includes

1. Provide interior and exterior signs and directories in accordance with this Section and applicable reference standards listed in Article 1.03.

1.02 PRICE AND PAYMENT PROCEDURES

A. Measurement and payment requirements: per Division 01 General Requirements.

1.03 REFERENCES

A. Reference Standards

1. Americans With Disabilities Act (ADA)

1.04 ADMINISTRATIVE REQUIREMENTS

A. Coordination, Sequencing, and Scheduling: per Division 01 General Requirements.

1.05 SUBMITTALS

A. Submit in accordance with the Division 01 General Requirements:

1. Shop Drawings

a. Provide large-scale Shop Drawings for fabrication, installation, and erection of all parts of the work. Provide large-scale layout of sign wording, spacing, type size, and style. Provide Plans, elevations, and details of anchorages, connections, and accessory items. Provide installation templates for work installed but others. Provide full size spacing templates for individual letters and numbers

2. Submit manufacturer's product data, installation instructions, use limitations and recommendations for each material used

3. Samples

a. Submit Samples showing complete range of colors, textures, and finishes available for each material used

b. Submit representative Samples of each material that is to be exposed in the finished work, showing the full range of color and finish

variations expected. Provide Samples having a minimum area of 144 square inches

4. Provide certification stating that materials comply with Regulations. Manufacturers shall have at least five years' experience in the manufacture of sign systems specified

B. Closeout and Maintenance Material Submittals: per Division 01 General Requirements.

1.06 QUALITY ASSURANCE

A. Provide in accordance with Division 01 General Requirements.

1.07 DELIVERY, STORAGE AND HANDLING

A. Provide in accordance with Division 01 General Requirements.

B. Deliver materials and products in unopened factory labeled packages. Store and handle in strict compliance with manufacturer's instructions and recommendations and protect from damage. Sequence delivers to avoid delays, but minimize on-site storage.

1.08 SITE CONDITIONS

A. Existing Conditions: per Division 01 General Requirements.

PART 2 – PRODUCTS

2.01 ACCEPTABLE MANUFACTURERS

A. For each type of material required for the work of this section, provide primary materials that are the products of one manufacturer. Provide secondary materials that are acceptable to the manufacturers of the primary materials

1. Road Traffic Signs
2. Traffic Safety Warehouse
3. Andco Industries
4. Cornelius
5. Gemini, Inc.
6. Lynn Sign Company
7. Mohawk Engraving Company
8. Stamprite Supersine

2.02 FABRICATION

A. Fabricate work to be straight, plumb, level, and square with smooth flat surfaces and sharp corners, except where indicated otherwise. Precisely form work to sizes, shapes, and profiles indicated on approved Shop Drawings. Fabricate metal work with uniform, invisible joints

2.03 SOURCE QUALITY CONTROL

A. Provide in accordance with Division 01 General Requirements.

PART 3 – EXECUTION

3.01 SEQUENCING AND SCHEDULING

A. Delay installation of work in this section until near time of Substantial Completion.

3.02 INSPECTION

A. The Installer shall examine substrates, supports, and conditions under which this work is to be performed and notify Contractor, in writing, of conditions detrimental to the proper completion of the work. Do not proceed with work until unsatisfactory conditions are corrected. Beginning work means installer accepts substrates and conditions

3.03 INSTALLATION

A. Strictly comply with manufacturer's instructions and recommendations, except where more restrictive requirements are specified in this section. Install work plumb, level, in true plane alignment. Provide signs and graphics where shown or schedule using mounting methods indicated.

3.04 TOLERANCES

A. The following allowable installed tolerances are allowable variations from locations and dimensions indicated by the Contract Document and shall not be added to the allowable tolerances indicated for other work

1. Allowable variation from true plumb, level and line: Plus or minus 1/8 inch in 10 feet

2. Allowable variation from true plane of adjusted surfaces: Plus or minus 1/16 inch

3.05 ADJUSTING, CLEANING AND PROTECTION

A. Adjust work to present the best possible appearance. Touch-up damaged finishes and repair damage to eliminate evidence of repair. Clean exposed surfaces using

materials and methods recommended by manufacturer of material or product being cleaned. Remove and replace work that cannot be successfully repaired or cleaned

B. Provide temporary protection to ensure work being without damage or deterioration at time of final acceptance. Remove protections and re-clean as necessary immediately before final acceptance

3.06 SIGNAGE AND GRAPHICS SCHEDULE

A. Provide signage as follows

1. Room identification

2. Toilet room identification

3. Other signs as required by Codes

3.07 FIELD QUALITY CONTROL

A. Provide in accordance with Division 01 General Requirements.

3.08 STARTUP & COMMISSIONING

A. Provide in accordance with Division 01 General Requirements.

3.09 CLOSEOUT ACTIVITIES

A. Provide in accordance with Division 01 General Requirements.

END OF SECTION

SECTION 26 05 00

COMMON WORK RESULTS FOR ELECTRICAL

PART 1 – GENERAL

1.01 SUMMARY

A. Section Includes

1. Provide the labor, tools, equipment, and materials necessary to furnish and install all electrical work as specified herein and in accordance with the Drawings and applicable reference standards listed in Article 1.03.

2. Coordinate with the local Electric Utility to provide electrical services as shown on the Drawings.

3. In general, electrical Work shall include but not be limited to the following:

   a. Power distribution equipment

   b. Power outlets and equipment connections

   c. Wiring devices

   d. Complete grounding system

   e. Service Entrance work

   f. Exterior Lighting

   g. All support material and hardware for raceway and electrical equipment

   h. Branch circuit wiring

   i. Underground electrical construction

   j. Start up, acceptance testing test reports and instruction of systems operation to the Owner.

1.02 PRICE AND PAYMENT PROCEDURES

A. Measurement and payment requirements: per Division 01 General Requirements.

1.03 REFERENCES

A. Reference Standards

1. Electrical equipment, materials, installation and workmanship shall comply with all state and local building codes, safety and fire law Regulations at the location of the Work and shall conform to the latest edition of the applicable codes and standards of the organizations listed:

a. National Electrical Code (NEC)

b. Underwriters' Laboratories (UL)

c. Institute of Electrical and Electronics Engineers (IEEE C2)

d. American National Standards Institute, Inc. (ANSI)

e. National Fire Protection Association (NFPA)

f. National Electrical Manufacturers Association (NEMA)

g. Insulated Power Cable Engineers Association (IPCEA)

h. Association of Edison Illuminating Companies (AEIC)

i. Occupational Safety Health Act (OSHA)

j. Americans with Disabilities Act (ADA)

2. Where the Contract requires the Work or any part of the same, to be above the standards required by applicable Laws, ordinances, rules and Regulations and other statutory provisions pertaining to the Work, such Work shall be performed and completed in accordance with the Contract requirements.

3. Should any changes in the Specifications and Drawings be necessary to conform to the requirements of any of the above mentioned codes or standards, the Contractor shall so notify the Owner's Representative.

B. Drawings required by Governing Authorities: Prepare any detailed diagrams or Drawings which may be required by the governing authorities.

C. Permits, Certificates, Inspections, Fees and Utility Costs:

1. The Contractor shall obtain and make payments for all permits, licenses, and certificates that are required for the associated Work.

2. Following completion of the Work, the Contractor shall obtain certificates of approval from the responsible agencies concerned with the Work.

3. Arrange for timely inspections required for Work under this section.

4. All utility company and municipal back charges shall be the responsibility of the Owner.

5. Cost of electricity shall be borne by the Contractor until substantial completion as determined by the Owner.

1.04 ADMINISTRATIVE REQUIREMENTS

A. Coordination, Sequencing, and Scheduling: per Division 01 General Requirements.

B. The electrical work shall be coordinated with the Work of other trades to prevent interferences and so that the progress in construction of the building will in no way be retarded.

C. Coordinate with all local utility companies and make all installations for their services in accordance with all utility company requirements.

D. Where lighting fixtures and other electrical items are shown in conflict with locations of structural members and mechanical or other equipment, furnish and install all required supports and wiring to clear the encroachment for a complete installation.

E. Any Work installed contrary to or without acceptance by the Engineer shall be subject to change as directed by the Engineer, and no extra compensation will be allowed to the Contractor for making these changes.

1.05 SUBMITTALS

A. Submit in accordance with Division 01 General Requirements.

B. Furnish manufacturer's product data, test reports, and materials certifications as required.

C. Follow the procedures specified in Division 01 Section “Submittals” and in addition, the Contractor shall prepare and submit a complete submittal list to the Engineer. The submittal list shall include all submittal items covered in the Division 26 Specification sections.

D. Shop Drawings shall be submitted to the General Contractor who shall review and approve them prior to submittal to the Engineer for approval. Shop Drawings shall identify the specific equipment and material being supplied; the quantity being supplied; and all accessories, dimensions, descriptions, mounting and connection details, wiring diagrams, elementary control diagrams, equipment interface diagrams and any other information necessary to determine compliance with the Plans and Specifications. Fabrication and installation shall be in accordance with the approved Shop Drawings.

E. As-built copies of all Shop Drawings shall be submitted to the Engineer.

F. Submit copies of reports, permits, and easements necessary for installation, use, and operation.

G. Submit copies of reports of tests, inspections, and meter readings as specified.

1.06 QUALITY ASSURANCE

A. Provide in accordance with Division 01 General Requirements.

1.07 DELIVERY, STORAGE, AND HANDLING

A. Provide in accordance with Division 01 General Requirements.

1.08 SITE CONDITIONS

A. Existing Conditions: per Division 01 General Requirements.

1.09 WARRANTY

A. Special Warranty/Extended Correction Period

B. Compile and assemble the warranties specified in Division 26 into a separate set of vinyl covered three ring binders, tabulated and indexed for easy reference.

C. Provide complete warranty information for each item. Information to include:

1. Product or equipment list

2. Date of beginning of warranty or bond

3. Duration of warranty or bond

4. Names, addresses, and telephone numbers and procedures for filing a claim and obtaining warranty services

1.10 DRAWINGS

A. The Specifications supplement the Drawings and provide information pertaining to the methods and materials to be used in the execution of the Work. When a discrepancy occurs between the two, the stricter of the two shall govern.

B. All electrical equipment such as junction and pull boxes, panelboards, switches, controls and such other apparatus as may require maintenance and operation from time to time shall be made easily accessible and properly labeled.

C. The Contractor shall examine all Contracts and reference Drawings, and verify and properly coordinate the placement of outlets. Contractor shall also check all Drawings including mechanical Drawings and Shop Drawings for apparatus for which he must rough-in and to which he must connect.

1.11 RECORD DRAWINGS

A. The Contractor shall maintain a complete and separate set of prints of Drawings and Specifications at job Site for duration of the Contract. The Contractor shall record Work completed and all changes from original Contract. Drawings shall clearly and accurately include Work installed as a modification or as an addition to the original design.

B. At completion of Work and prior to final request for payment, the Contractor shall submit a complete set of reproducible Record Drawings showing all systems as actually installed.

1.12 JOB CONDITIONS

A. Existing Conditions

1. Existing Utilities: Locate existing underground utilities in excavation areas. If utilities are indicated to remain, support and protect services during excavation operations.

2. Prior to all Work of this section, carefully inspect the installed Work of all other trades and verify that all such Work is complete to the point where this installation may properly commence.

3. Verify that the electrical installation may be made in complete accordance with all pertinent codes and Regulations and the original design.

B. Coordination:

1. Coordinate the installation of electrical items with the schedules for Work of other trades to prevent unnecessary delays in the total Work.

2. Coordinate with all local utility companies and make all installations for their services in accordance with all utility company requirements.

3. Any changes shall be done at the Contractor's expense.

4. Where lighting fixtures and other electrical items are shown in conflict with locations of structural members and mechanical or other equipment, furnish and install all required supports and wiring to clear the encroachment for a complete installation.

5. Any Work installed contrary to or without acceptance by the Engineer shall be subject to change as directed by the Engineer, and no extra compensation will be allowed to the Contractor for making these changes.

C. Accuracy of Data:

1. The Drawings are diagrammatic and functional only, and are not intended to show exact circuit layouts, number of fittings, components and place in satisfactory operational power, lighting, and other electrical systems shown. Install additional circuits, components and material wherever needed to conform to the specific requirements of the equipment whether or not indicated or specified.

2. Information and components called for in the Specification but not shown on Plans or vice versa shall apply and shall be provided as though required expressly by both.

3. The locations of equipment, fixtures, outlets and similar devices shown on the Drawings are approximate only. Field measurements shall take precedence over scaled dimensions from Drawings. Exact locations shall be as accepted by Engineer during construction. Obtain in the field all information relevant to the placing of electrical work and, in case of any interference with other Work, proceed as directed by the Engineer and furnish all labor and materials necessary to complete the Work in an acceptable manner.

4. The Drawings and the Specifications are intended to comply with all pertinent codes, Regulations and standards. In the event of discrepancy, the Contractor shall immediately notify the Engineer in writing of said discrepancies and apply for an interpretation and, unless an interpretation is offered in writing by the Engineer prior to the execution of the Contract, the applicable rules and Regulations shall be complied with as a part of the Contract.

5. In case of difference between building codes, Specifications, state Laws, industry standards and the Contract Documents, the most stringent shall govern. Should the Contractor perform any Work that does not comply with the requirements of the applicable building codes, state Laws, and industry standards, he shall bear all cost arising in correcting these deficiencies.

6. Verify size and ratings of motors and other electrically operated devices supplied by others.

7. Check with Engineer before installation of Work for outlets not specified as to location or for Work that interferes with other trades.

1.13 PRODUCT DELIVERY, STORAGE, AND HANDLING

A. Use all means necessary to protect electrical system materials before, during and after installation and to protect the installed Work and materials of all other trades.

B. In the event of damage, immediately make all repairs and replacements necessary to the acceptance of the Engineer and at no additional cost to the Owner. If any apparatus has been subject to possible injury by water, it shall be thoroughly dried out and put through such special tests as directed by the Engineer, at the cost and expense of the Contractor, or shall be replaced by the Contractor at his own expense.

C. Protect the Work of other trades. Restore any damage caused to other trades to the condition existing prior to damage at no additional cost to the Owner.

D. Investigate each space in the building through which equipment must pass to reach its final location. If necessary, the manufacture shall be required to ship his material in sections sized to permit passing through such restricted areas in the building.

1.14 WORK PERFORMANCE

A. Electrical work shall be accomplished with all affected circuits or equipment de-energized. When an electrical outage cannot be accomplished in this manner for the required Work, the following requirements are mandatory:

1. Electricians must use full protective equipment (i.e., certified and tested insulating material to cover exposed energized electrical components, certified and tested insulated tools, etc.) while working on energized systems in accordance with NFPA 70E.

2. Electricians must wear personal protective equipment while working on energized systems in accordance with NFPA 70E.

3. Before initiating any Work, a job specific Work plan must be developed by the Contractor and the Owner. The Work plan must include procedures to be used on and near the live electrical equipment, barriers to be installed, and safety equipment to be used and exit pathways.

4. Work on energized circuits or equipment cannot begin until prior written approval is obtained from the Owner.

1.15 DEFINITIONS

A. As used in this Specification, “provide” means “furnish and install”, “furnish” means “to purchase and deliver to the Project Site complete with every necessary appurtenance and support and to store in a secure area in accordance with manufacturer’s instructions”, and “install” means “to unload at the delivery point at the Site or retrieve from storage, move to point of installation and perform every operation necessary to establish secure mounting and correct operation at the proper location in the Project”.

B. Finished Areas: In general, areas with carpet or tile floors, lay-in or fixed ceiling tile, special architectural ceiling treatment, or tiled, plastered, or paneled walls shall be considered finished areas.

C. Interior: For the purposes of this Specification, interior is any area within the boundaries of the foundation of any building within the superstructure or other structures not classified as a building.

1.16 TEMPORARY POWER

A. The Contractor shall furnish, install, maintain, and remove the temporary electrical power and lighting systems, including lamps, and pay for all labor, materials, and equipment required therefore. All such temporary electrical work shall meet the requirements of the National Electrical Code, the local utility company, and OSHA.

B. The Contractor shall make all necessary arrangements with the local utility company as to where the temporary electric service can be obtained.

C. The Contractor shall secure and pay for all required permits and back charges for Work performed by others, and other expenses incidental to the installation of the temporary electric service.

1.17 POSTED OPERATING INSTRUCTIONS:

A. Provide for each system and principal item of equipment as specified in the technical sections for use by operation and maintenance personnel. The operating instructions shall include the following:

1. Wiring diagrams, control diagrams, and control sequence for each principal system and item of equipment.

2. Start up, proper adjustment, operating, lubrication, and shutdown procedures.

3. Safety precautions.

4. The procedure in the event of equipment failure.

5. Other items of instruction as recommended by the manufacturer of each system or item of equipment.

B. Print or engrave operating instructions and frame under glass or in approved laminated plastic. Post instructions where directed. For operating instructions exposed to the weather, provide weather-resistant materials or weatherproof enclosures. Operating instructions shall not fade when exposed to sunlight and shall be secured to prevent easy removal or peeling.

1.18 MANUFACTURER'S NAMEPLATE

A. Each item of equipment shall have a nameplate bearing the manufacturer's name, address, model number, and serial number securely affixed in a conspicuous place; the nameplate of the distributing agent will not be acceptable.

1.19 FIELD FABRICATED NAMEPLATES

A. Provide laminated plastic nameplates for each equipment enclosure, relay, switch, and device; as specified in the technical sections or as indicated on the Drawings. Each nameplate inscription shall identify the name of the equipment, function and, when applicable, the position. Nameplates shall be melamine plastic, 0.125 inch thick, black with white letters. Surface shall be matte finish. Corners shall be square. Accurately align lettering and engrave into the core. Minimum size of nameplates shall be one by 2.5 inches. Lettering shall be a minimum of 0.25 inch high normal block style. All electrical equipment shall be labeled with the following:

1. Panel Name
2. Fed from “Panel Name” & “CKT #”
3. Amps
4. Volts
5. Phase

1.20 ARC FLASH LABEL

A. Provide arc flash labels for all electrical equipment with operating voltages greater than 50 volt per NEC 110.16.

1.21 WARNING SIGNS

A. Exterior warning and caution signs shall be weather resistant, nonfading, preprinted cellulose acetate butyrate signs with 20 gauge, galvanized steel backing, with colors, legend, and size appropriate to the location.

B. Interior warning and caution signs shall be aluminum signs with preprinted baked enamel finish and punched for fasteners. Colors, legend, and size appropriate to location.

1.22 WIRE AND CABLE MARKERS

A. Underground line marking tape shall be permanent, bright colored, continuous printed, metal backed, plastic tape compounded for direct burial service not less than 6 inches wide. Printed legend indicative of general type of underground line below.

B. Wire labels for wires smaller than No. 4. shall be vinyl or vinyl cloth, self-adhesive, wraparound, wire markers with preprinted numbers and letters. Wire sizes No. 4 and larger and multi conductor cables shall be marked with one-piece, nylon locking marker ties equal to Panduit PLM Series.

C. Reference Specification 260543 "Underground Ducts and Raceways for Electrical Systems" for further requirements.

PART 2 – PRODUCTS

2.01 MATERIALS

A. Materials and equipment shall be listed by UL unless it can be demonstrated that no UL standards exist for a specific item or class of equipment.

B. All other materials, not specifically described but required for a complete and operable electrical installation, shall be new, first quality of their respective kinds, Specification grade or better, and as selected by the Contractor subject to the acceptance by the Engineer.

C. All materials and equipment furnished and installed on this Project shall meet the most stringent efficiency standards of the local utility to qualify for the maximum rebate.

2.02 MATERIAL AND CONSTRUCTION REQUIREMENTS

A. Unless otherwise shown or specified, all enclosures, motors, wiring and other materials and all construction methods shall conform to the following:

1. Indoor, Above Ground, Dry Areas - NEMA 12, General Purpose, with gasketing for applications where atmospheric conditions are normal. Enclosures shall be sheet steel, treated to resist corrosion, prime painted and finished with a gray baked-on enamel. Control stations shall have NEMA 13, oil tight and dust-tight enclosures.

2. Outdoors, Moist Areas and Indoor Below Grade Areas - NEMA 4, watertight. Enclosures shall be cast aluminum or stainless steel. Where indicated on electrical Plans provide NEMA 4X enclosures of stainless steel or reinforced non-metallic (Krydon) construction. All installations shall utilize only stainless steel fasteners/hardware.

3. Indoor-Outdoor, Subject to Submersion in Liquid - NEMA 6, submersible, liquid tight construction. Enclosures shall be cast aluminum.

4. Hazardous Areas - NEMA 7 & 9, explosion-proof construction for Class 1, Division 1, Group D areas. Enclosures shall be cast aluminum.

5. Corrosive Atmospheres - All Work located in corrosive atmospheres, such as atmospheres in the filter area and the chemical feed pump areas shall be of such construction that the corrosive agent cannot enter into and damage the electrical work. All materials in these areas shall be non-corrodible or finished with an inert coating. Stainless steel, or reinforced PVC electrical enclosures and PVC coated rigid conduit and fittings are required. In

addition, provide gas tight seals in all conduits passing from or into corrosive areas (similar to Crouse Hinds Type EYS), to minimize migration of corrosive fumes to other building areas.

2.03 INTERCHANGEABILITY

A. In all design and purchasing, interchangeability of items of equipment, subassemblies, parts, motors, starters, relays and other items is essential. All similar items shall be of the same manufacturer, type, model and dimensions.

B. For ease of maintenance and parts replacement, to the maximum extent possible, use equipment of a single manufacturer.

C. The Engineer reserves the right to reject any submittal which contains equipment from various manufacturers if suitable materials can be secured from fewer manufacturers and to require that source of materials be unified to the maximum extent possible.

2.04 SOURCE QUALITY CONTROL

A. Provide in accordance with Division 01 General Requirements.

PART 3 – EXECUTION

3.01 COORDINATION

A. Prior to all Work of this section, carefully inspect the installed Work of all other trades and verify that all such Work is complete to the point where this installation may properly commence.

B. Field verify all locations and dimensions to ensure that the equipment will be properly located, readily accessible, and installed in accordance with all pertinent codes and Regulations, the Contract Documents, and the referenced standards.

C. The Work shall be carefully laid out in advance, and where cutting, drilling, etc., of floors, walls, ceilings, or other surfaces is necessary for the proper installation, this Work shall be carefully done, and any damage to building, piping, or equipment shall be repaired by skilled mechanics of the trades involved at no additional cost to the Owner.

D. In the event any discrepancies are discovered, immediately notify the Owner's Representative in writing. Do not proceed with installation in areas of discrepancy until all such discrepancies have been fully resolved.

3.02 INSTALLATION

A. Install all equipment and fixtures in complete accordance with the manufacturer's recommendations and all pertinent codes and Regulations.

B. Thoroughly inspect all items of equipment and any items dented, scratched, or otherwise damaged in any manner shall be replaced or repaired and painted to match original finish. All items so repaired and refinished shall be brought to the attention of the Engineer for inspection and acceptance.

C. Coordinate the installation of required supporting devices and sleeves to be set in poured-in-place concrete or supported from or on other structural components, as they are constructed.

D. Sequence, coordinate, and integrate installations of electrical materials and equipment for efficient flow of the Work. Give particular attention to large equipment requiring positioning prior to closing in the building and equipment which must be placed in service before further construction can take place.

E. Where mounting heights are not detailed or dimensioned, install systems, materials, and equipment to provide the maximum headroom possible.

F. The final routing of raceways shall be determined by structural conditions, interferences with other trades and by terminal locations on apparatus. The Engineer reserves the right of a reasonable amount of shifting at no extra cost up until time of roughing in the Work.

G. Where circuits are shown as “home-runs” all necessary fittings and boxes shall be provided for a complete raceway installation.

H. In general, wiring and raceway systems for security alarm, fire alarm, telephone and intercommunications systems are not indicated on the Drawings but shall be furnished and installed under this section.

I. Each lighting and each receptacle circuit shall have its own neutral, dedicated to that circuit. A common neutral for more than one signal phase circuit is not allowed.

J. Surface mounted panel boxed, junction boxes, conduits, etc., shall be supported by spacers to provide a clearance between wall and equipment.

K. Upon completion of all installation, lamping, and testing, thoroughly inspect all exposed portions of the electrical installation and completely remove all exposed labels, soils, markings and foreign material.

3.03 MARKING AND LABELING

A. All panelboards, indoor transformers, cabinets, control panels and other specified equipment shall be labeled with engraved laminated plastic plates with engraved letters. Punch tapes with mastic backings are not acceptable.

B. All starters, disconnect switches and other specified equipment shall be marked with engraved laminated plastic plates and engraved letters. Where individual

switches are circuit breakers in power or distribution panel boards do not have cardholders, they shall be marked with ½" high labels.

C. All empty conduits shall have labels tied to the pull string at each end of each empty conduit, marked as to identification of each end. Junction boxes with circuits provided for future use shall be labeled with appropriate circuit designation.

D. All panelboards directories shall be filled out with typewritten identification of each circuit.

3.04 WIRE AND CABLE MARKERS

A. Tag control circuit conductors at both ends and at junction box splices using wire and cable markers with identification numbers as designated on equipment wiring diagrams. Provide typed listing to identify conductors by number and use.

B. Identify spare conductors, individually, at both ends and at junction box splices with number between 1 and 999. Do not duplicate numbers.

C. Identify wire numbers on terminal block marking strips.

D. Provide permanent plastic name tag indicating load for each feeder for all junction boxes, handholes and manholes. Label all process motor wires to yard equipment in handholes and manholes.

3.05 TEST & SETTINGS

A. Provide the services of an independent Testing Agency to perform the specified tests outlined in their respective specification sections.

B. Provide the services of a recognized independent testing agency to perform Commissioning of Electrical Systems as specified in 26 08 00 – Commissioning of Electrical Systems.

C. Provide necessary material, equipment, labor and technical supervision to perform and complete the Electrical Acceptance Tests as required.

D. Acceptance tests as herein specified are defined as those tests and inspections required to determine that the equipment involved is acceptable as delivered to the job Site, that the equipment may be energized for final operational tests and is in accordance with the Specifications.

E. Final acceptance of the equipment and/or workmanship will depend upon performance characteristics as determined by the subject tests, in addition to complete operation tests, on all electrical equipment to show that it will perform the functions for which it was designed.

F. If the test and inspection data submitted should indicate deficiencies in the operation of the electrical apparatus or in the manufacturer thereof, the Contractor shall promptly implement the necessary adjustments, corrections, modifications and/or replacements necessary to be made to meet the specified requirements.

G. Upon completion of the remedial Work, the Testing Agency shall repeat all of the tests on components previously found deficient on the first test or any additional test if they be required. It shall be the responsibility and obligation of the Contractor to have all remedial Work accomplished as may be required by second and/or additional tests.

3.06 CLEANING

A. When all Work is complete and has been tested and accepted by the Owner's Representative, the Contractor shall clean all light fixtures, equipment, and exposed surfaces that have been directly affected by this Work. The Contractor, insofar as the Work is concerned, shall at all times keep the premises in a neat and orderly condition and at the completion of the Work shall properly clean up and remove from the Site any excess materials.

3.07 FIELD QUALITY CONTROL

A. Provide in accordance with Division 01 General Requirements.

3.08 STARTUP & COMMISSIONING

A. Provide in accordance with Division 01 General Requirements.

END OF SECTION

SECTION 26 05 19

LOW-VOLTAGE ELECTRICAL POWER CONDUCTORS AND CABLES

PART 1 – GENERAL

1.01 SUMMARY

A. Section Includes

1. Provide the labor, tools, equipment, and materials necessary to install wires, cables, and connectors in accordance with the Plans and in accordance with this section and applicable reference standards listed in Article 1.03.

2. This section includes wires, cables, and connectors for power, lighting, signal, control, and related systems rated 600 volts and less.

B. Related Requirements

1. Division 26: Section 26 05 00 COMMON WORK RESULTS FOR ELECTRICAL

1.02 PRICE AND PAYMENT PROCEDURES

A. Measurement and payment requirements: per Division 01 General Requirements.

1.03 REFERENCES

A. Reference Standards

1. National Fire Protection Association (NFPA) 70

2. National Electrical Code (NEC)

3. Underwriter's Laboratories, Inc. (UL) Compliance

a. UL Standard 83 Thermoplastic Insulated Wires and Cables

b. UL Standard 486A Wire Connectors and Soldering Lugs for Use with Copper Conductors

c. UL Standard 854 Service Entrance Cable

4. National Electrical Manufacturers Association (NEMA) Compliance

a. WC 5 Thermoplastic Insulated Wire and Cable for the Transmission and Distribution of Electrical Energy

b. WC 7 Cross-Linked Thermosetting Polyethylene Insulated Wire and Cable for the Transmission and Distribution of Electrical Energy

c. WC 8 Ethylene Propylene Rubber Insulated Wire and Cable for the Transmission and Distribution of Electrical Energy

5. Institute of Electrical and Electronic Engineers (IEEE) Compliance

a. Standard 82 Test Procedure for Impulse Voltage Tests on Insulated Conductors

1.04 ADMINISTRATIVE REQUIREMENTS

A. Coordination, Sequencing, and Scheduling: per Division 01 General Requirements.

1.05 SUBMITTALS

A. Submit in accordance with Division 01 General Requirements.

B. Product data

1. Product data for electrical wires, cables, and connectors

2. Product data for Megger insulation testing instrument

3. Report sheets for Megger testing

C. Manufacturer Reports

1. Furnish manufacturer's product data, test reports, and materials certifications as required

1.06 QUALITY ASSURANCE

A. Provide in accordance with Division 01 General Requirements.

1.07 DELIVERY, STORAGE, AND HANDLING

A. Provide in accordance with Division 01 General Requirements.

B. Deliver wire and cable properly packaged in factory fabricated type containers, or wound on NEMA specified type wire and cable reels.

C. Store wire and cable in clean dry space in original containers. Protect products from weather, damaging fumes, construction debris, and traffic.

1.08 SITE CONDITIONS

A. Existing Conditions: per Division 01 General Requirements.

PART 2 – PRODUCTS

2.01 MATERIALS

A. General

1. Provide factory-fabricated wires of sizes, ampacity ratings, and materials for applications and services indicated. Where not indicated, provide proper wire selection as determined by Installer to comply with Project's installation requirements, NEC and NEMA standards.

2. Provide color-coding for phase identification as specified herein.

3. Provide factory applied nylon or polyvinyl chloride (PVC) external jackets on wires and cables for pulls in raceways over 100 feet in length, for pulls in raceways with more than three equivalent 90 degree bends, for pulls in conduits underground or under slabs on grade, and where indicated.

B. Service, Distribution, and Exterior/ Underground Wiring

1. 98 percent conductivity copper

2. 600 volt insulation, type XHHW

3. U.L. listed for underground use in wet locations at 75 degrees C

C. Splices

1. No. 10 and smaller with 600-volt pressure type insulated connector of wire-nut type, or equal; soldered and crimped type not allowed. Ideal type wire nut Buchanan type B-Cap and Minnesota Mining (3M) type Scotchlok.

2. No. 8 and larger with solderless lugs or solderless connectors of lock-tite or similar type properly taped with plastic insulating tape, Minnesota Mining Co. #33, or equal, then two half-lap servings of friction tape, Manson, or equal.

3. Wire connector systems for use with underground conductors shall be UL listed specifically for such use

4. Service entrance conductors shall be installed without splices. Electrical equipment feeders shall be spliced only where shown or specifically approved. Control and metering conductors shall be installed without splices.

5. All splices shall be made only by specific permission of the Engineer and then only in manholes or pull boxes and shall be sealed watertight with a heat-shrunk insulation.

6. Tighten electrical connectors and terminals in accordance with manufacturer's published torque tightening values. Where manufacture's torqueing requirements are not indicated, tighten connectors and terminals to comply with tightening torques specified in UL Standards 486A and 486B.

7. Use UL listed splice for all underground wires, ducts buried, in conduit and in ducts. Connectors and splices shall be waterproof.

2.02 SOURCE QUALITY CONTROL

A. Provide in accordance with Division 01 General Requirements.

PART 3 – EXECUTION

3.01 WIRE AND CABLE INSTALLATION

A. All wire and cables shall be installed in conduit of size and type indicated on the Drawings and Specifications.

B. Install electrical cables, wires, and connectors in compliance with NEC.

C. Pull conductors simultaneously where more than one is being installed in same raceway. Use UL listed pulling compound or lubricant, where necessary.

D. Use pulling means including, fish tape, cable, rope, and basket weave wire/cable grips, which will not damage cables or raceways. Do not use rope hitches for pulling attachment to wire or cable.

E. Conceal all cable in finished spaces.

F. Install exposed cable parallel and perpendicular to surfaces or exposed structural members, and follow surface contours, where possible.

G. Conductors shall be sized such that voltage drop does not exceed 3 percent for branch circuits or 5 percent for feeder/branch circuit combination.

H. Provide adequate length of conductors within electrical enclosures and train the conductors to terminal points with no excess. Bundle multiple conductors, with conductors larger than 10 AWG cabled in individual circuits. Make terminations so there is no bare conductor at the terminal.

I. All feeder and branch circuit wiring shall be color coded at all termination and splice locations. System neutrals shall be designated in addition to phase conductors. Equipment grounds shall be green.

J. The number of conductors shown on the Drawings is not necessarily the correct number required. As many conductors as are required in each case shall be installed. In general, grounding conductors are not scheduled.

K. In general, wiring for the following systems shall be installed in separate conduits. Do not mix categories in a single raceway.

1. 120 volt power wiring

2. 120 volt control wiring, including, digital input and output signals

3. 24 volt DC control wiring, including, digital input and output signals

4. 24 volt DC analog control wiring (4-20mA)

5. Communications wiring

6. Special & Emergency Systems

L. Conductors 600 volts and below shall be color coded in accordance with the following:

CONDUCTOR	120 / 208 COLOR	480 / 277 COLOR
Phase A	Black	Brown
Phase B	Red	Orange
Phase C	Blue	Yellow
Neutral	White	White / Gray
Equipment Grounds	Green	Green

3.02 FIELD QUALITY CONTROL

A. Provide in accordance with Division 01 General Requirements.

B. The Contractor shall test each electrical circuit after permanent cables are in place with terminators installed, but before cable or wire is connected to equipment or devices to demonstrate that each circuit is free from improper grounds and short circuits.

C. The Contractor shall Megger Test the insulation resistance between phases and from each phase to ground for each of the following feeder and motor branch circuits:

1. Secondary Service Entrance

2. Power Distribution Equipment

3. Generator and ATS

4. Transformers

5. Variable Frequency Drives

6. Motors

D. The Megger Testing shall be witnessed by the Engineer. The Engineer shall be notified at least 48 hours in advance of testing.

E. Measure the insulation resistance with a digital Megger insulation testing instrument in accordance with manufacturer's recommendations. All test instruments are to be provided by the Contractor.

F. If any insulation resistance measures less than 50 megohms, the cable shall be considered faulty with the cable failing the insulation test. In moist environments, bag the ends of the cable to prevent a faulty Megger test.

G. Any cable which fails the insulation tests or which fails when tested under full load conditions shall be replaced with new cable for the full length and retested at no additional cost to Owner.

H. The below grade service or feeder splice shall be water immersion Megger tested in the presence of the Engineer. Each splice shall be immersed in a grounded water immersion bath for 24 continuous hours prior to and during the test. Criteria for failure shall be as described for cable above.

3.03 STARTUP & COMMISSIONING

A. Provide in accordance with Division 01 General Requirements.

3.04 CLOSEOUT ACTIVITIES

A. Provide in accordance with Division 01 General Requirements.

END OF SECTION

SECTION 26 05 26

GROUNDING AND BONDING FOR ELECTRICAL SYSTEMS

PART 1 – GENERAL

1.01 SUMMARY

A. Provide all labor, tools, equipment, materials and appurtenances necessary to furnish and install grounding materials in accordance with the Drawings and as specified herein. This section includes solid grounding of electrical systems and equipment.

1.02 PRICE AND PAYMENT PROCEDURES

A. Measurement and payment requirements: per Division 01 General Requirements.

1.03 REFERENCES

A. The publications listed below form a part of this specification to the extent referenced. The publications are referred to within the text by the basic designation only. Unless otherwise noted, the most recent version of the listed publications, including revisions, at time of bid opening shall apply.

B. NATIONAL ELECTRICAL CODE (NEC), as applicable to electrical grounding and bonding, Art. 250.

C. UNDERWRITERS' LABORATORIES, INC. (UL)

1. UL 467 Electrical Grounding and Bonding Equipment

D. INSTITUTE OF ELECTRICAL AND ELECTRONIC ENGINEERS (IEEE) IEEE 81 AND 142

1. 81-2012 IEEE Guide for Measuring Earth Resistivity, Ground Impedance, and Earth Surface Potentials of a Grounded System (Part 1)

2. 141-1993 IEEE Recommended Practice for Electric Power Distribution for Industrial Plants

3. 142-2007 IEEE Recommended Practice for Grounding of Industrial and Commercial Power Systems

1.04 ADMINISTRATIVE REQUIREMENTS

A. Coordination, Sequencing, and Scheduling: per Division 01 General Requirements.

1.05 SUBMITTALS

A. Submit in accordance with Division 01 General Requirements.

B. All submittals shall have pertinent numerical data and information specified in the "English" language using "English" units. The submittals shall include but are not limited to the following in addition to Division 01 General Requirements.

C. Product Data

1. Provide product data for all grounding equipment and appurtenances, including but not limited to; wires, connectors, lugs, clamps, ground rods, bonding jumpers and accessories.

1.06 QUALITY ASSURANCE

A. Provide in accordance with Division 01 General Requirements.

1.07 DELIVERY, STORAGE, AND HANDLING

A. Provide in accordance with Division 01 General Requirements.

1.08 SITE CONDITIONS

A. Existing Conditions: per Division 01 General Requirements.

PART 2 – PRODUCTS

2.01 GENERAL

A. Provide each electrical grounding system with assembly of materials required for complete installation including wires/cables, connectors, lugs, clamps, ground rods, bonding jumpers and accessories.

B. Provide electrical grounding conductors for grounding connections matched to power supply wiring materials and sized according to NEC.

C. Provide electrical connectors, lugs, clamps, boding jumpers and accessories as recommended by the respective manufacturer for the particular application, unless other indicated.

D. Ground Rods: Solid copper clad, 3/4-inch diameter by 10 feet long.

E. Insulated Conductors: Green in color.

F. Ground Bus. Bare annealed copper bars of rectangular cross section, ¼-inch x 3-inch x length as required, with 98 percent conductivity, rigidly attached to structure.

G. Bonding Strap Conductor/Connectors: Soft copper, 0.05 inch thick and 2-inches wide, except as indicated.

H. Pressure Connectors: High conductivity plated units.

I. Bolted Clamps: Heavy-duty units listed for the application.

J. Exothermic Welded Connections: Provided in kit form and selected for the specific types, sizes, and combinations of conductors and other items to be connected.

2.02 SOURCE QUALITY CONTROL

A. Provide in accordance with Division 01 General Requirements.

PART 3 – EXECUTION

3.01 GROUNDING & BONDING

A. Ground main service entrance ground bus or lug to neutral of incoming service, to enclosure, to building steel, to ground rods/grounding ring, to rebar in concrete footing, and to main cold water pipe. Install grounding bushings or service conduits. Use exothermic style ground connections to the ground rods and building steel.

B. Use of conduit system as the ground conductor shall not be allowed.

C. Provide and install 600 volt insulated bonding conductors throughout the distribution system with connection to bonding (or grounding) terminal on each panel and panel board with connections to other equipment where specifically indicated and noted.

D. Bonding conductors shall be continuous where possible. Where splices are required, provide compression connectors of approved pattern. Insulate connectors to equivalent thickness of conductors.

E. Provide grounding system for grounded circuit conductors of dry type transformer secondary in accordance with NEC. Use exothermic style ground connections to building steel. Enclose grounding conductors in schedule 40 PVC conduit.

F. Provide equipment grounding conductors in all conduits containing power, control, or instrumentation conductors on the load side of the service equipment or on the load side of a separately derived system.

G. Comply with NEC Article 250 for sizes and quantities of equipment grounding conductors, except that larger sizes indicated or shown on the Contract Documents shall take precedence. Use of metallic conduit systems for equipment grounding as recognized by the NEC shall not be permitted under this specification.

H. Install grounding bushings on conduits at both primary and secondary entrances to transformers. Ground transformer enclosures to bushings.

I. Install bonding jumper for flexible metal conduit unless fittings are approved for grounding or otherwise comply with NEC.

1. Size jumper to match over-current device.

2. Green insulation.

3. Connect to grounding bushing at each end.

J. Ensure that entire electrical system is electrically continuous and permanently and effectively grounded, including all electrical equipment and motors.

1. Locate ground rods with a minimum of two rod length from each other and at least the same distance from any other grounding electrode. Connect ground conductors to ground rods by means of exothermic welds except at test wells and as otherwise indicated. Drive rods until tops are 24 inches below finished floor or final grade except as otherwise indicated.

K. Route grounding electrode conductors along the shortest and straightest paths possible without obstructing access or placing conductors where they may be subjected to strain, impact, or damage, except as indicated.

L. Ensure that grounding electrode conductor connections to interior piping, structural members, and the like are accessible for periodic inspection during the life of the structure.

3.02 BONDING FOR OTHER TRADES

A. Signal raceways, water piping, heating piping and metallic air ducts shall be bonded together and to the grounding conductor with No. 8 soft drawn bare solid conductors. Connections to pipes shall be made with cast clamps of like material as the pipes to which attached, to ducting terminated in a secure manner by best practical means, bonding across any flexible or insulated connections.

B. All bonding conductors shall be installed in a neat manner properly shaped for contour of surface involved and properly supported. At locations remote from the main service entrance panel boards, bond to the largest raceway nearby.

3.03 FIELD TESTING

A. Provide the services of an independent Testing Agency to perform the specified tests for the following systems:

1. Ground resistance. The Testing Company shall perform all testing in accordance with National Electrical Testing Association (NETA) standards and procedures. All testing results shall be submitted on NETA forms and the testing data shall be certified by the respective Agency. Test results shall indicate recommended action for a sub-par test results. Results shall list recommended test values that should be obtained for new installation.

A. Measure ground resistance without the soil being moistened by any means other than natural precipitation or natural drainage or seepage and without chemical treatment or other artificial means of reducing natural ground resistance. Perform tests by the three-point fall of potential method in accordance with Section 9.03 of IEEE 81. Simple moisture addition is not acceptable.

B. Ground/resistance maximum values shall be as follows:

1. Equipment rated 500 kVA and less: 10 ohms.

2. Equipment rated 500 kVA to 1000 Kva: 5 ohms.

3. Equipment rated over 1000 kVA: 3 ohms.

4. Unfenced substations and pad mounted equipment: 5 ohms.

5. Fence Grounds: 10 ohms.

C. Where ground resistances exceed specified values, and if directed, modify the grounding system to reduce resistance values.

3.04 FIELD QUALITY CONTROL

A. Provide in accordance with Division 01 General Requirements.

3.05 STARTUP & COMMISSIONING

A. Provide in accordance with Division 01 General Requirements.

3.06 CLOSEOUT ACTIVITIES

A. Provide in accordance with Division 01 General Requirements.

END OF SECTION

SECTION 26 05 33

RACEWAYS AND BOXES FOR ELECTRICAL SYSTEMS

PART 1 – GENERAL

1.01 SUMMARY

A. Section Includes

1. Provide the labor, tools, equipment, and materials necessary to furnish and install raceways, boxes, and supporting devices in accordance with the Plans and applicable reference standards listed in Article 1.03.

B. Types of products specified in this section include

1. Conduit, Raceways & Fittings

2. Supporting Devices

3. Boxes and Fittings

C. Related Requirements

1. Division 26: Section 26 05 00 COMMON WORK RESULTS FOR ELECTRICAL

2. Division 26: Section 26 05 43 UNDERGROUND DUCTS AND RACEWAYS FOR ELECTRICAL SYSTEMS

1.02 PRICE AND PAYMENT PROCEDURES

A. Measurement and payment requirements: per Division 01 General Requirements.

1.03 REFERENCES

A. Reference Standards

1. Underwriters Laboratories, Inc. (UL) Listing and Labeling. Items provided under this section shall be listed and labeled by UL

2. National Electrical Code (NEC)

3. National Electrical Manufacturers Association (NEMA)

1.04 ADMINISTRATIVE REQUIREMENTS

A. Coordination, Sequencing, and Scheduling: per Division 01 General Requirements.

1.05 SUBMITTALS

A. Submit in accordance with Division 01 General Requirements.

B. Furnish manufacturer's product data, test reports, and material certifications as required.

C. Product data for cabinets and enclosures.

D. Shop Drawings for floor boxes and boxes, enclosures and cabinets that are to be shop fabricated (non-stock items)

1.06 QUALITY ASSURANCE

A. Provide in accordance with Division 01 General Requirements.

1.07 DELIVERY, STORAGE, AND HANDLING

A. Provide in accordance with Division 01 General Requirements.

1.08 SITE CONDITIONS

A. Existing Conditions: per Division 01 General Requirements.

PART 2 – PRODUCTS

2.01 CONDUIT, RACEWAYS & FITTINGS

A. Provide conduit with 3/4 inch diameter minimum, except where specifically shown smaller on the Drawings.

B. Conduit, connectors, and fittings shall be approved for the installation of electrical conductors.

C. Refer to Table 3.01A for approved conduit installation guidelines.

1. Electrical Metallic Tubing (EMT)

   a. EMT shall be rigid metallic conduit of the thin wall type in straight lengths, elbows, or bends and must conform to NEMA C80.3 and the requirements of UL 797.

   b. Couplings and connectors shall be steel compression fittings. Where EMT enters outlet boxes, cabinets, or other enclosures, connectors must be the insulated-throat type, with a locknut. Fittings must meet the requirements of NEMA FB 1.

2. Rigid Galvanized Steel Conduit

a. Rigid steel conduit (RGS), including couplings, elbows, bends, and nipples, shall conform to the requirements of UL 6 and NEMA C80.1 Steel fittings shall be galvanized by the hot-dip process.

b. Fittings for rigid steel conduit shall be threaded and shall conform to NEMA FB 1.

c. Gaskets shall be solid for fittings sized 1-1/2 inches and less. Conduit fittings with blank covers shall have gaskets except in clean, dry areas or at the lowest point of a conduit run where drainage is required.

d. Covers shall have captive screws and be accessible after the Work has been completed.

3. Rigid Aluminum Conduit

a. RAC, including couplings, elbows, bends, and nipples, shall conform to the requirements of UL 6 and ANSI C80.5.

b. Fittings for rigid aluminum conduit shall be threaded and shall conform to NEMA FB 1. Fittings shall be galvanized by the hot dip process, unless manufacturer dictates aluminum for specific application.

c. Gaskets shall be solid for fittings sized 1-1/2 inches and less. Conduit fittings with blank covers shall have gaskets except in clean, dry areas or at the lowest point of a conduit run where drainage is required.

d. Covers shall have captive screws and be accessible after the work has been completed.

4. PVC Coated Rigid Metal Conduit

a. Rigid galvanized metal conduit coated with 40 mils thick polyvinylchloride coating.

b. Fittings, elbows, supporting devices and accessories shall include factory applied 20 mils thick polyvinylchloride coating and be manufactured by the same as that of the conduit.

c. Use tools as recommended by the manufacturer so as not to damage PVC coating. Where coating is damaged, touch-up with PVC paint in the field after installation.

5. Rigid Plastic Conduit

a. PVC Schedule 40: Conduit shall be made of polyvinyl chloride compound that shall be homogeneous plastic material free from cracks, holes or foreign inclusions. Conduit shall be rated for use with 90 degree C conductors, UL Listed. Use solvent cement to

join conduits as manufactured the same as the conduit manufacturer.

b. PVC Schedule 80: Heavy wall PVC conduit that shall be made of polyvinyl chloride compound that shall be homogeneous plastic material free from cracks, holes or foreign inclusions. Conduit shall be rated for use with 90 degree C conductors, UL Listed. Use solvent cement to join conduits as manufactured the same as the conduit manufacturer.

6. Flexible Metallic Conduit

a. Flexible metallic (FM) conduit shall meet the requirements of UL1.

b. Liquid tight flexible metallic conduit shall be provided with a protective jacket of PVC extruded over a flexible interlocked galvanized steel core to protect wiring against moisture, oil, chemicals, and corrosive fumes.

c. Fittings for flexible metallic conduit shall meet the requirements of UL 514B, Type I box connector, electrical, Type III coupling, electrical conduit, flexible steel, or Type IV adapter, electrical conduit.

7. Wireways

a. Wireways and auxiliary gutters for use in exposed, dry locations shall be a prefabricated channel-shaped sheet metal trough with hinged or removable covers, associated fittings, and supports for housing, and protecting electrical wires and cables in accordance with UL 870.

b. Straight sections of trough, elbows, tees, crosses, closing plates, connectors, and hanging brackets shall be constructed from sheet steel of commercial quality not less than 16-gage. Sheet metal component parts shall be cleaned, phosphatized, and coated with a corrosion-resistant gray paint.

c. Straight sections of wireways and auxiliary gutters shall be solid or have knockouts as indicated in both sides and bottom, 3 inches on center.

d. Straight sections shall be not more than 5-feet long, with covers held closed with screws.

8. Conduit Seals

a. Provide factory fabricated watertight conduit sealing bushing assemblies suitable for sealing around conduit, or tubing passing through concrete floors and walls. Provide a cast in place water stop wall sleeve with a mechanical pipe seal between the conduit

and the sleeve. Construct seals with steel sleeve, malleable iron body, neoprene sealing grommets or rings, metal pressure rings, pressure clamps, and cap screws.

b. Provide E.Y.S. seal fittings with appropriate potting material where conduits enter or leave a Class 1, Division 1 or 2 environments or a Class 2, Division 1 or 2 environment, and chemical rooms.

2.02 SUPPORTING DEVICES

A. Supports, support hardware, and fasteners shall be protected with zinc coating or with treatment of equivalent corrosion resistance using approved alternative treatment, finish, or inherent material characteristic. Products for use outdoors shall be hot dip galvanized unless material is inherently corrosion resistant.

B. Refer to Table 2.02A for approved supporting device installation guidelines.

1. Conduit Supports

a. Single run hangers: Galvanized steel conduit straps or clamps, or cast metal beam clamps. Perforated straps and spring steel clips and clamps will not be permitted.

b. Group run hangers: Minimum 12-gauge galvanized performed U-channel rack with conduit fittings; 25 percent spare capacity

c. Hanger rods: Threaded steel, 3/8-inch diameter, or as identified on the Drawings

d. Vertical run supports: Minimum 12-gauge galvanized performed U-channel struts with conduit fittings

2. Equipment and Lighting Supports

a. 12-gauge galvanized performed U-channel struts with fixture and conduit fittings, as applicable, unless indicated otherwise on the Drawings.

3. Corrosive Area Supports

a. Clamp Hangers, Pipe Straps, and Clamp Back Spacers for use with PVC-coated rigid metal conduit shall have 40 mil gray PVC exterior coating.

b. Clamp Hangers, Pipe Straps, etc. for use with PVC nonmetallic conduit shall be of nonmetallic PVC material.

c. Hanger Rods: 20 mil gray PVC exterior coated rod with threaded ends only 3/8 inch and 1/2 inch sizes as required.

d. Strut Support: 20 mil gray PVC exterior coating strut. Standard channel, slotted channel, and back to back channel are acceptable.

e. Provide stainless steel supports and accessories in lieu of PVC coated supports when indicated in Table 2.02A below.

TABLE 2.02A – Supporting Devices

Location/Equipment	Acceptable Support Type
All	Stainless Steel Channel

2.03 BOXES AND FITTINGS

A. Boxes must have sufficient volume to accommodate the number of conductors entering the box in accordance with the requirements of NFPA 70 and UL 514A.

B. In general, boxes that are exposed to weather, process areas, normally wet locations, and locations exposed in mechanical spaces shall be cast-metal. Boxes in all other finished areas shall be sheet metal. Boxes installed in corrosive areas, such as the chemical feed room, shall be nonmetallic.

C. Refer to Table 2.03A for approved enclosure types.

1. Sheet Metal Outlet Boxes

a. Sheet Metal Outlet Boxes: Standard type galvanized steel, minimum four inch square or octagon by 1-1/2 inch deep.

b. Luminaire and Equipment Supporting boxes: Rated for weight of equipment supported; include 2 inch male fixture studs where required.

c. Single Wall Type: Minimum size, four inch square by 1-1/2 inch or 2-1/8 inch deep, except as noted. Provide dry wall device covers raised 3/4 inch minimum to insure flush finish mounting.

d. Ganged Wall Type: Minimum depth three inches except as noted, ganged as required under common plate to contain devices shown. On 277-volt circuits, ganged boxes for switches shall contain only one circuit or equip box with permanent barriers per NEC Art 404-8.

2. Cast Outlet Boxes

a. Type FS shallow and type FD deep, cast ferroalloy

b. Provide number of threaded hubs as required.

c. Use in all exterior, damp and locations exposed in mechanical spaces.

d. Provide gasketed cover and accessories by box manufacturer for complete weatherproofing. Provide correct box to accept weatherproof covers as specified.

3. Sheet Metal Pull & Junction Boxes

   a. Sheet metal boxes shall be standard type galvanized steel and must conform to UL 50.

   b. Box dimensions shall be minimum four inch square or octagon by 2/1/2 inch deep.

   c. Sizes up to 12 by 12 by 6 inches: Provide screw-type or hinged covers.

   d. Sizes greater than 12 by 12 by 6 inches: Provide hinged covers.

   e. Boxes shall be sized to accommodate all incoming raceways.

4. Nonmetallic Outlet, Device, and Wiring Boxes

   a. Conform to NEMA OS 2, Nonmetallic Outlet Boxes, Device Boxes, Covers, and box Supports, and UL 514C, Nonmetallic Outlet Boxes, Flush Device Boxes and Covers. Boxes shall be molded polyvinyl chloride (PVC), or fiberglass units of type, shape, size, and depth to suit location and application.

   b. Boxes shall be equipped with threaded screw holes for device and cover plate mounting. Each box shall have a molded cover of matching material suitable for the application and location installed.

TABLE 2.03A – Electrical Enclosure Types

Location/Equipment	Acceptable Enclosure Type
Exterior	NEMA 4X, Stainless Steel

2.04 SOURCE QUALITY CONTROL

A. Provide in accordance with Division 01 General Requirements.

PART 3 – EXECUTION

3.01 CONDUIT

A. Uses Permitted

1. Use liquid tight flexible metal conduit for the final 24 inches of connections to motors or control items subject to movement or vibration.

2. Use RGS for all exterior aboveground installations unless otherwise noted.

3. Use PVC coated rigid steel conduit, or as scheduled below, for installation in corrosive areas, and other areas as identified on the Drawings.

4. Exposed raceways in Manufacturing Areas, Utility Rooms, Mechanical Rooms, Warehouse Areas, etc., shall be Rigid Galvanized Steel below 15 feet.

5. Conduit and raceway runs in finished areas concealed in or behind walls, above ceilings, or exposed on walls and ceilings 15 feet or more above finished floors and not subject to mechanical damage may be electrical metallic tubing (EMT).

6. Use Schedule 40 PVC conduit for exterior direct buried installations. Use Schedule 40 PVC conduit for exterior concrete encased installations. Use Schedule 80 PVC conduit for underground installations under driveways. The transition from underground and from concrete encasement to riser shall be PVC coated rigid steel conduit to a minimum of 12 inches above finished floor and/or finished grade elevation. All elbows shall be prefabricated Rigid Steel to prevent wire burn through. Reference specification 26 05 43 'Underground Ducts and Raceways for Electrical Systems' for further requirements.

7. Install conduit seals for conduit penetrations of slabs on grade and exterior walls below grade and where indicated. Tighten sleeve seal screws until sealing grommets have expanded to form watertight seal. Provide seals for the interior of conduits that penetrate exterior or water bearing walls, consisting of gland type sealing bushings or RTV closed cell silicone foam.

8. Refer to Table 3.01A below for approved conduit types.

TABLE 3.01A – Conduit Types

Location/Equipment	Acceptable Support Type
Underground	Sched 80 PVC
Transition Above Grade: Stub-Up & Elbow	RGS
Exterior Above Grade	RGS

B. Power, lighting, control, emergency light and power, and special-service systems and all related components shall be installed in accordance with NFPA 70, and shall be enclosed in separate conduit or separate conduit systems as indicated on the Drawings and as specified herein.

C. Any run of conduit between outlet and outlet, between fitting and fitting, or between outlet and fitting shall contain no more than the equivalent of three 90-degree bends, including those bends located immediately at the outlet or fitting. Field bends shall be made in accordance with the manufacturer's recommendations, which normally require use of a one-size-larger bender than would be required for uncoated conduit. Installed conduit and fittings shall be free of dirt and trash and shall not be deformed or crushed. Empty conduit shall have a pull rope stalled.

D. Conduit shall be installed with a minimum of 3 inches of free air space separation from mechanical piping.

E. Conduit in finished areas shall be installed concealed. Conduit passing through masonry or concrete walls shall be installed in sleeves. Conduit shall be securely clamped and supported at least every 10 feet vertically and 8 feet horizontally. Galvanized pipe straps shall be fastened to structure with bolts, screws, and anchors. Wooden masonry plugs shall not be used.

F. Install exposed conduits, parallel or perpendicular to walls, ceilings, or structural members. Do not run through structural members. Avoid horizontal runs within partitions or sidewalls. Avoid ceiling inserts, lights, or ventilation ducts or outlets. Do not run conduits across pipe shafts or ventilation duct openings and keep conduits a minimum of 6 inches from parallel runs of flues, hot water pipes, or other sources of heat. Wherever possible, install horizontal raceway runs above water and steam piping.

G. Do not run conduits exposed on the exterior surface of buildings. Conduits penetrating exterior walls below grade, at grade floors, or below grade floors shall be sealed to prevent moisture migration. The exterior of the conduit shall be sealed with a mechanical pipe seal. The interior conduit seal shall be a gland type sealing bushing or RTV closed cell silicone foam. Ensure that conduits do not retain water against these seals.

H. Raceways penetrating fire rated walls, floors, and partitions shall be sealed with a fire rated sealant.

I. All conduits shall be supported with materials specifically made for this purpose. Do not use wire hangers. Do not attach any parts of the raceway system to ventilation ducts. Conduit supports shall be attached to the building. Support conduits on each side of bends and on a spacing not to exceed the following: 6 feet for conduits smaller than 1 1/4 inches and 8 feet for conduits 1 1/4 inches and larger. Support riser conduits at each floor level with clamp hangers. All underground conduits shall be securely anchored to prevent movement during placement of concrete or backfill. Use precast separators and heavy gauge wire ties or other approved fasteners.

J. Provide E.Y.S. seal fittings with appropriate potting material where conduits enter or leave a Class 1, Division 1 or 2 environments or a Class 2, Division 1 or 2 environment, and chemical rooms.

K. Conduit connections to boxes and fittings shall be supported not more than 36 inches from the connection point. Conduit bends shall be supported not more than 36 inches from each change in direction. Conduit shall be installed in neat symmetrical lines parallel to the centerlines of the building construction and the building outline. Multiple runs shall be parallel and grouped whenever possible on common supports. Exposed ends of conduit without conductors shall be sealed with watertight caps or plugs.

L. Bonding wires shall be used in flexible conduit for all circuits. Flexible conduit shall not be considered a ground conductor.

M. Liquid tight flexible metallic conduits shall be used in wet and oily locations and to complete the connection to motor-driven equipment.

N. Electrical connections to vibration-isolated equipment shall be made with flexible metallic conduit in a manner that will not impair the function of the equipment.

O. A polypropylene pull rope with a tensile strength not less than 130 pounds shall be installed in empty conduit.

P. Electrical conduit may be embedded in concrete according to the provisions of Article 6.3 of ACI 318 Building Code Requirements for Reinforced Concrete, provided the following conditions are met:

1. Outside diameter of conduit shall not exceed 1/3 of concrete thickness. Maximum conduit outside diameter shall not exceed 3 inches when embedded in slab.

2. Conduit shall not be placed closer than three diameters on center. Route conduit to minimize crossing of different conduit runs.

3. Conduit shall not be embedded in structural concrete slabs less than four inches thick.

4. A 1-1/2 inch minimum concrete cover shall be provided for conduits in structural concrete slabs.

Q. Installation of Underground Conduit

1. Minimum of 3/4 inch conduit in or under concrete slab on grade.

2. Where conduits are installed in concrete slabs, on the ground, underground, or exposed to the weather, make all joints liquid tight and gas tight.

3. Bury all underground conduit, except under concrete slabs placed on fill, to a depth of at least 30 inches below finished grade unless otherwise indicated on the Drawings .

4. Slope ducts to drain away from buildings into manholes and/or handholes. Adjust final slopes to coordinate with existing Site utilities.

5. Install on undisturbed soil where possible. Concrete encase conduits as shown on Drawings. Use pit run gravel and sand, placed 8-inch lifts and compacted for backfill.

1. Reference Specification 26 05 43 UNDERGROUND DUCTS AND RACEWAYS FOR ELECTRICAL SYSTEMS for further requirements.

R. Installation of Rigid Metal Conduit

1. Ends of conduit shall be cut square, reamed and threaded, and joints shall be brought butt-to-butt in the couplings. Joints shall be mechanically tight. Conduit shall be protected against damage and the entrance of water or foreign material during construction.

2. Ninety-degree bends of conduit with a diameter larger than 1 inch shall be made with factory-made elbows. Conduit elbows larger than 2 1/2 inches shall be long radius. Field-made bends and offsets shall be made with an approved hickey or conduit-bending machine. Changes in directions of runs shall be made with symmetrical bends or cast-metal fittings.

3. At connections to sheet metal enclosures and boxes, a sufficient number of threads shall project through to permit the bushing to be drawn tight against the end of the conduit, after which the locknut shall be pulled up sufficiently tight to draw the bushing into firm electrical contact with the box. Conduit shall be fastened to sheet metal boxes and cabinets with two locknuts where required by NFPA 70 where insulating bushings are used,

where bushings cannot be brought into firm contact with the box, and where indicated.

4. Conduit joints shall be made with tapered threads set firmly. Each length of conduit cut in the field shall be reamed before installation. Where conduit is threaded in the field, each threaded end shall consist of at least five full threads. Corrosion-inhibitive compound (cold galvanizing paint) shall be used on all conduit threads or any locations where the original hot galvanized surface has been compromised.

5. Conduit stubbed-up through concrete floors for connections to free-standing equipment except motor-control centers, cubicles, and other such items of equipment shall be provided with a minimum of a 12 inch riser above the floor slab is of sufficient thickness; if not, a floor box shall be provided and set flush with the finished floor. Conduits installed for future use shall be terminated with a coupling and plug set flush with the floor.

3.01 SUPPORTING DEVICES

A. Install supporting devices to fasten electrical components securely and permanently in accordance with NEC requirements.

B. Coordinate with the building structural system and with other electrical installations.

C. Conform to manufacturer's recommendations for selection and installation of supports.

D. Install individual and multiple (trapeze) raceway hangers and riser clamps as necessary to support raceways. Provide U-bolts, clamps, attachments, and other hardware necessary for hanger assembly and for securing hanger rods and conduits.

E. Support parallel runs of horizontal raceways together on trapeze type hangers.

F. Support individual horizontal raceways by separate pipe hangers. Spring steel fasteners may be used in lieu of hangers only for 1 1/2 inch and smaller raceways serving lighting and receptacle branch circuits above suspended ceilings only. For hanger rods with spring steel fasteners, use 1/4 inch diameter or larger threaded steel. Use spring steel fasteners that are specifically designed for supporting single conduits or tubing.

G. In vertical runs, arrange support so the load produced by the weight of the raceway and the enclosed conductors is carried entirely by the conduit supports with no weight load on raceway terminals.

H. Support miscellaneous electrical components as required to produce the same structural safety factors as specified for raceway supports. Install metal channel

racks for mounting cabinets, panelboards, disconnects, control enclosures, pull boxes, junction boxes, transformers, and other devices.

I. Install sleeves in concrete slabs and walls and all other fire rated floors and walls for raceways and cable installations. For sleeves through fire rated wall or floor construction, apply UL listed fire-stopping sealant in gaps between sleeves and enclosed conduits and cables.

3.02 BOXES AND FITTINGS

A. Pullboxes shall be furnished and installed where necessary in the conduit system to facilitate conductor installation. Conduit runs longer than 100 feet or with more than three right angle bends shall have a pull box installed at a convenient intermediate location.

B. Boxes and enclosures shall be securely mounted to the building structure with supporting facilities independent of the conduit entering or leaving the boxes.

C. Bonding jumpers shall be used around concentric or eccentric knockouts.

D. Installation of Outlet Boxes

1. Use nonmetallic boxes in corrosive areas such as chemical feed area and as designated on the Plans.

2. Use explosion proof boxes in Hazardous areas as identified on the Drawings.

3. Use cast metal boxes in all other locations. Each box with associated covers and fittings shall have a NEMA rating for each location installed.

E. Installation of Pull and Junction Boxes

1. Use general-purpose boxes (NEMA 1) in finished areas with framed construction.

2. Use dust-tight and oil-tight boxes (NEMA 12) in other dry interior areas.

3. Use explosion proof boxes (NEMA 7) in hazardous areas as designated on the Plans.

4. Use watertight boxes (NEMA 4) for exterior and wet locations on outdoor structure where moisture is present.

5. Use corrosion resistant watertight boxes (NEMA 4X) for wet locations and corrosion filled areas, such as the chemical feed area, and as identified on the Drawings.

3.03 FIELD QUALITY CONTROL

A. Provide in accordance with Division 01 General Requirements.

3.04 STARTUP & COMMISSIONING

A. Provide in accordance with Division 01 General Requirements.

3.05 CLOSEOUT ACTIVITIES

A. Provide in accordance with Division 01 General Requirements.

END OF SECTION

SECTION 26 05 43

UNDERGROUND DUCTS AND RACEWAYS FOR ELECTRICAL SYSTEMS

PART 1 – GENERAL

1.01 SUMMARY

A. Provide all labor, materials, equipment and incidentals as shown, specified and required to furnish and install underground duct banks, manholes and handholes including all necessary excavation, backfill and surface restoration.

B. Provide underground conduit duct banks with manholes and pullboxes for power, and lighting circuits as shown on the Drawings.

C. Coordination: Duct bank routing when shown on the Drawings is diagrammatic. Coordinate installation with piping and other underground systems and structures and locate clear of interferences. Coordinate manhole and handhole installation with piping, sheet piling and other underground systems and structures and locate clear of interferences.

D. Related Requirements

1. Division 26, Section 26 05 00 COMMON WORK RESULTS FOR ELECTRICAL

2. Division 26, Section 26 05 33 RACEWAYS AND BOXES FOR ELECTRICAL SYSTEMS

3. Division 26, Section 26 05 19 LOW-VOLTAGE ELECTRICAL POWER CONDUCTORS AND CABLES

4. Division 26, Section 26 05 26 GROUNDING AND BONDING FOR ELECTRICAL SYSTEMS

5. Division 26, Section 26 21 00 LOW-VOLTAGE ELECTRICAL SERVICE ENTRANCE

1.02 PRICE AND PAYMENT PROCEDURES

A. Measurement and payment requirements: per Division 01 General Requirements.

1.03 REFERENCES

A. Reference Standards

1. National Electrical Manufacturers Association (NEMA)

2. The American National Standards Institute (ANSI)

3. The Institute of Electrical and Electronic Engineers (IEEE)

4. Insulated Cable Engineers Association (ICEA)

5. National Electrical Code (NEC)

6. National Electrical Safety Code (NESC)

7. ANSI A14.3, Safety Requirements for Fixed Ladders

8. OSHA

9. ASTM

   a. ASTM A 48, Gray Iron Castings

   b. ASTM D756, Procedure E: Accelerated Service Exposure

   c. ASTM G53: Recommended Practice for Operating Light and Water Exposure on Nonmetallic Materials (with a U.V.A. 340 bulb)

   d. ASTM D570, Section 5, 6.1, 6.5: Water Absorption

   e. ASTM D790: Flexural Properties

   f. ASTM D635: Flammability Test

B. Definitions

1. Duct: Electrical conduit and other raceway, either metallic or nonmetallic, used underground, embedded in earth or concrete.

2. Duct bank: 2 or more conduits or other raceway installed underground in the same trench or concrete envelope.

3. Handhole: An underground junction box in a duct or duct bank with cover accessible from grade.

4. Manhole: an underground utility structure, large enough for a person to enter, with facilities for installing and maintaining cables. Where required manholes shall comply with the Utility Companies requirements.

1.04 ADMINISTRATIVE REQUIREMENTS

A. Coordination, Sequencing, and Scheduling: per Division 01 General Requirements.

1.05 SUBMITTALS

A. Submit in accordance with Division 01 General Requirements.

B. Shop Drawings

1. Layouts showing the proposed routing of duct banks and the locations of manholes, handholes and areas of reinforcement

2. Profiles of duct banks showing crossings with piping and other underground systems

3. Typical cross sections

4. Installation procedures

5. Manufacturer's technical information for manholes, handholes and accessories proposed for use

6. Drawings showing interior and exterior manhole and handhole dimensions and details of openings, jointing, inserts, reinforcing, size and locations of openings, and accessory locations

7. Certificate of concrete and steel used in underground pre-cast concrete utility structures, according to ASTM C858

8. Product Data for nonmetallic conduit and manhole accessories

C. Record Drawings

1. Layouts showing the actual routing of duct banks including the dimensions and depth of the top of duct bank below grade. Record Drawings for duct banks should also include cross sections of the duct bank indicating the circuit, use, conduit size, orientation and number of conduits.

2. Locations of manholes, handholes, and areas of reinforcement

1.06 QUALITY ASSURANCE

A. Provide in accordance with Division 01 General Requirements.

1.07 DELIVERY, STORAGE, AND HANDLING

A. Provide in accordance with Division 01 General Requirements.

1.08 SITE CONDITIONS

A. Existing Conditions: per Division 01 General Requirements.

PART 2 – PRODUCTS

2.01 DUCT BANK CONDUIT

A. Duct: Schedule 40 and Schedule 80 PVC conduit and fittings in accordance with Division 26, Section Raceways and Boxes for Electrical Systems.

B. Rigid Steel Conduit: Rigid steel conduit and fittings in accordance with Division 26, Section Raceways and Boxes for Electrical Systems.

C. All shielded instrumentation and communications cable shall be installed in ferrous metal, steel conduit throughout the entire run of conduit from end to end.

2.02 HANDHOLES

A. The pull/splice box underground enclosures shall be constructed of polymer concrete consisting of sand and aggregate bound together with a polymer resin. Internal reinforcement may be provided by means of steel, fiberglass, or a combination of the two.

B. Handholes for installation in roadways, or within 3’-0” of roadways, shall pre-cast concrete, reinforced, H20 traffic rated with watertight cast iron cover.

C. Enclosure

1. The enclosure must be manufactured with an open or closed bottom and a removable cover. The enclosures shall be green or concrete gray in color.

2. The enclosures shall be designed to be installed flush to grade with the cover fitting flush to the box.

3. The enclosures shall be suitable for installation in either direct or buried native soil, embedded in concrete, or embedded in asphalt surfacing. (A concrete collar is required for installation in asphalt).

4. The enclosures shall be of a stackable design for greater installation flexibility.

5. All covers are to be equipped with a minimum of two stainless steel lockdown mechanisms. All covers shall have a logo recessed into the cover and it shall read ELECTRIC.

6. All enclosure covers will have some type of recessed access point to allow removal of the cover with a hook. The access points will be placed in such a location to allow for the greatest amount of leverage and safety possible

7. Enclosures shall be designed and suitable for installation and use through a temperature range of minus 40ºC (minus 40ºF) to 60ºC (140ºF).

8. A certified copy of all test reports must be signed and stamped by a registered professional Engineer and submitted prior to shipment of products.

D. Material Requirements

1. Permanent deflection of any surface shall not exceed 10 percent of the maximum allowable static design load deflection.

2. The covers shall be skid resistant and have a maximum coefficient of friction of 0.50 on the top surface of the cover. Coatings will not be allowed.

3. Any point on the covers must be able to withstand a 70 foot-pound impact administered with a 12-pound weight having a "C" tup (ASTM D-2444) without puncturing or splitting. The test shall be performed with the cover resting on a flat, rigid surface such as concrete or a 1 steel plate

4. Covers shall have molded lettering, ELECTRIC or COMM as applicable

5. Fastening devices used to secure the cover to the box shall be capable of withstanding a minimum torque of 15 foot-pounds and minimum straight pullout strength of 750 pounds.

6. The material is tested according to the requirements of ASTM D543, Section 7, Procedure 1, for chemical resistance. The manufacturer is responsible for proof of compliance with the latest version of the ASTM standards

7. Comply with the following acceptance standards.

a. ASTM D756

b. ASTM G53

c. ASTM D570

d. ASTM D790

e. ASTM D635

E. Acceptable level of quality for handholes: equivalent to Strongwell Quazite, or approved equal.

2.03 SOURCE QUALITY CONTROL

A. Provide in accordance with Division 01 General Requirements.

PART 3 – EXECUTION

3.01 GENERAL

A. Concrete shall be measured, mixed and placed, and compacted as required in Division 03.

B. Provide not less than 3 inches of concrete between the outside of a duct and the earth. Provide not less than 2 inches of concrete between adjacent ducts. Refer to Drawings for spacing requirements. Provide side forms for each duct bank.

C. All duct line concrete pours shall be continuous between manholes or handholes and between manholes or handholes and structures.

D. Where duct lines pass through concrete walls, concrete envelopes shall be extended through the finished flush with inside surfaces. Watertight construction joints of an approved type shall be provided.

E. Duct banks shall be reinforced when laid on backfill covering new pipelines, roads, parking lots or any are subject to vehicular traffic. Beneath these areas, install reinforcing bars as shown on the Drawings, extending 10 feet beyond area needing protection.

F. Duct lines shall be laid in trenches on mats of gravel not less than 6 inches thick and well graded.

G. All electrical duct banks shall be colored red for safety purposes.

H. Install raceways to drain away from buildings. Raceways between manholes or handholes shall drain toward the manholes or handholes. Raceway slopes shall not be less than 3 inches per 100 feet.

I. Make raceway entrances to buildings and vaults with hot dipped rigid galvanized steel conduit not less than 10 feet long. Conduits which are not concrete encased for runs below floor slabs in slab-on-grade construction shall be hot dipped rigid galvanized steel conduit. Conduits which are concrete encased for runs below floor slabs in slab-on-grade construction shall be encased under the slab to their respective equipment.

J. Raceway terminations at manholes shall be with end bells for PVC conduit and insulated throat grounding bushings with lay-in type lugs for metal conduit.

3.02 PROJECT CONDITIONS AND COORDINATION

A. Coordination with other Underground Utilities

1. Locate all existing underground utilities through the use of an underground utility piping location Services Company. Locate the existing underground utilities and piping before any excavation is to begin.

2. Coordinate conduit routing, duct bank and manholes with other new and existing underground utilities. Revise locations and elevations as required to suit field conditions and ensure that conduits, duct runs, manholes, and handholes do not interfere with existing and new underground utilities and piping.

3.03 INSTALLATION

A. Provide excavation and backfilling required for ductbank manhole and handhole installation.

B. Make duct bank installations and penetrations through foundation walls watertight.

C. Assemble duct banks using non-magnetic saddles, spacers, and separators. Position separators to provide 3-inch minimum separation between the outer surfaces of the ducts.

D. Firmly fix ducts in place during pouring of concrete. Carefully spade and vibrate the concrete to insure filling of all spaces between ducts.

E. Make bends with sweeps of not less than 48-inch radius or 5 degree angle couplings.

F. Make a transition from non-metallic to PVC coated rigid steel conduit where duct banks enter structures or turn upward for continuation above grade. Terminate the ducts in insulated grounding bushings. Continue ducts inside buildings with steel, metallic conduit.

G. Where ducts enter manholes and handholes, terminate the ducts in suitable end bells.

H. Provide expansion/deflection fittings in accordance with the requirements specified in Division 26, Section Raceways and Boxes for Electrical Systems.

I. Do not backfill with material containing large rock, paving materials, cinders, large or sharply angular substances, corrosive material, or other materials that can damage or contribute to corrosion of ducts or cables or prevent adequate compaction of fill.

J. Slope duct runs for drainage toward manholes and away from buildings with a slope of approximately 3 inches per 100 feet.

K. After completion of the duct bank and prior to pulling cable, pull a mandrel, not less than 12 inches long and with a cross section approximately 1/4 inch less than the inside cross section of the duct, through each duct. Then pull a rag swab or sponge through to make certain that no particles of earth, sand or gravel have been left in the duct.

L. Install a bare stranded copper duct bank ground cable in each duct bank envelope. Make ground electrically continuous throughout the entire duct bank system. Connect ground cable to building and station ground grid or to equipment ground buses. In addition, connect ground cable to steel conduit extensions of the underground duct system. Provide ground clamp and bonding of each steel conduit extension, where necessary to maintain continuity of the ground system. Terminate ground conductor at last manhole or handhole for outlying structures.

M. Install a warning ribbon approximately 12 inches below finished grade over all underground duct banks. The identifying ribbon shall be a PVC tape, 3 inches wide, yellow color, permanently imprinted with CAUTION BURIED ELECTRIC LINE BELOW in black letters.

N. Plug and seal all empty spare ducts entering buildings and structures. Seal all ducts in use entering buildings and structures. Seal shall be watertight, O-Z/Gedney Type Dux Duct Sealing Compound or equal.

O. Install duct banks in conformance with National Electrical Code and National Electrical Safety Code.

P. Install manholes and handholes where shown on Drawings. Verify final locations in field.

Q. Complete installation of manholes and handholes so that structures are watertight. Provide expansion/deflection fitting for each conduit entry into the manholes.

R. Provide sump opening in manhole floor.

S. Provide grading rings or brick stacks for manholes when required to adjust manhole cover to proper grade. Stacks shall be a minimum of 12 inches in height, constructed on the roof slab or cone section on which the manhole frame and cover shall be placed. The height of the stack shall be such as is necessary to bring the manhole frame to the proper grade.

T. Cable Racks

1. Provide cable hooks to support each cable on each rack along the cable run within the manholes.

2. Individually support each cable at each hook on porcelain insulators.

3. In the manhole, securely tie each cable in place at each insulator block to prevent excessive movement of insulators, cables, or fireproof tape. Tie cables with non-metallic 3/4-inch strapping tape as manufactured by 3M or tie down with nylon straps.

U. Conduits shall extend 3 inches above concrete slab surface, unless otherwise indicated. All conduits shall be bushed to protect cables and provide means for grounding.

V. Duct Bank Conduit Spacers: Non-metallic, snap together intermediate and bottom pieces, sized for conduit diameter and code spacing. Carlon Span-Loc or approved equal. Separators shall be compatible with the conduit utilized. The joints of the conduits shall be staggered by rows and layers to provide a duct line having the maximum strength. During construction, partially completed duct lines, shall be protected from the entrance of debris such as mud, sand, and dirt by means of suitable conduits plugs. As each section of a duct line is completed, a testing mandrel not less than 12 inches long with a diameter 1/4 inch less than the size of the conduit, shall be drawn through each conduit, after which a brush having the diameter of the duct, and having stiff bristles shall be drawn through until the conduit is clear of all particles of earth, sand and/or gravel; conduit plugs shall then be immediately installed. Provide a plastic pull rope, having a minimum of 3 additional feet at each end, in all spare ducts.

3.04 DUCT BANK INSTALLATION

A. All bends shall have a radius greater than 36 inches or 12 times conduit inside diameter whichever is greater.

B. Install duct with minimum slope of 4 inches per 100 feet. Slope duct away from building entrances.

C. Install no more than equivalent of three 90-degree bends between pull points.

D. Provide suitable fittings to accommodate expansion and deflection where required.

E. Use suitable separators and chairs installed not greater than 4 feet on centers. Conduit separation shall be per code, and not less than 3 inches.

F. Securely anchor duct to prevent movement during concrete placement. Use re-bar holders at spacers and secure with No. 4 re-bar driven into the earth at a minimum of 1 foot.

G. Connect to manhole wall using No. 6 re-bar dowels. Dowels shall be located at each corner, and 12 inches on center. Insert dowels minimum 3 inches into manhole and 3 feet into duct bank.

H. Tops of concrete-encased ducts shall be

1. Not less than 24 inches and not less than shown on the Drawings, below finished grade

2. Not less than 30 inches and not less than shown on the Drawings, below roads and other paved surfaces

I. Tops of direct burial ducts and conduits shall be

1. Not less than 24 inches and not less than shown on the Drawings, below finished grade

2. Not less than 30 inches and not less than shown on the Drawings, below roads and other paved surfaces

3.05 PRE-CAST MANHOLE INSTALLATION

A. Install and seal pre-cast sections in accordance with manufacturer's instructions.

B. Install manholes plumb.

C. Attach cable racks to inserts after manhole installation is complete.

D. Provide 12 inches minimum gravel bedding under manholes, and 12 inches gravel fill around manholes.

E. Conduit/Ductwork penetration shall be grouted and sealed. Penetration shall be watertight.

3.06 CABLE PULLING

A. The inspection, handling, storage, temperature conditioning prior to installation, bending and training limits, pulling limits, and calculation parameters for installation of all cables must comply with the manufacturer's recommendations. For ease of installation and prevention of cable damage, the Contractor shall utilize quadrant blocks located properly along the cable run. Failure to comply with any of the above shall make this Contractor responsible for any cable failures that occur within the manufacturer's Warranty Period.

B. Cable lubricant shall be soapstone, graphite, or talc for rubber or plastic jacketed cables.

C. Lubricants for assisting in the pulling or jacketed cables shall be those specifically recommended by the cable manufacturer.

D. Cable pulling tensions shall not exceed the maximum pulling tensions recommended by the cable manufacturer.

E. All medium voltage cables shall be individually fire/arc proofed.

3.07 CABLE TERMINATING

A. Terminations of insulated power and lighting cables shall be protected from accidental contact, deterioration of coverings and moisture by the use of terminating devices and materials. Terminations shall be made using materials and method as indicated or specified herein or as designed by the written instruction of the cable manufacturer and termination kit manufacturer.

3.08 FIELD QUALITY CONTROL

A. Provide in accordance with Division 01 General Requirements.

3.09 STARTUP & COMMISSIONING

A. Provide in accordance with Division 01 General Requirements.

3.10 CLOSEOUT ACTIVITIES

A. Provide in accordance with Division 01 General Requirements.

END OF SECTION

SECTION 26 08 00

COMMISSIONING OF ELECTRICAL SYSTEMS

PART 1 – GENERAL

1.01 SUMMARY

A. Section Includes

1. Perform Acceptance Tests for all electrical equipment furnished in accordance with this Section and applicable reference standards listed in Article 1.03.

   a. The test requirements for equipment shall be as required by applicable standards and manufacturer's recommendations, and in accordance with this Specification. In no case will the absence of test requirements herein be construed as alleviation of acceptance testing.

   b. The purpose of electrical field acceptance tests is to ensure that all electrical equipment is operational and within industry and manufacturer's tolerances and is installed in accordance with the Specifications and approved Shop Drawings.

   c. Tests are in addition to factory tests at the Manufacturer's facility, and may not substitute for same.

   d. Tests are in addition to all other tests specified under other Specifications and shall be coordinated by the Contractor.

   e. Tests in general shall be conducted after the equipment installation is complete. Tests shall be complete and in order given herein and/or in Specifications for the particular equipment unless otherwise approved by the Engineer.

   f. Tests are also intended to provide, ensure, or determine the following:

      1) Provide initial acceptance tests and recorded data that can be used as a benchmark for future routine maintenance and troubleshooting by plant personnel.

      2) Ensure a successful start-up with a minimum of last minute interruptions and problems.

      3) Determine the suitability of the equipment and systems for energization and placing into operation.

      4) Provide assurance that each system component is not only installed satisfactorily but performs, and will continue to

perform its function in the system with reasonable reliability throughout the life of the equipment.

B. Related Requirements

1. Division 26: Section 26 05 00 COMMON WORK RESULTS FOR ELECTRICAL

1.02 PRICE AND PAYMENT PROCEDURES

A. Measurement and payment requirements: per Division 01 General Requirements.

1.03 REFERENCES

A. Reference Standards

1. American National Standards Institute (ANSI)
2. American Society for Testing and Materials (ASTM)
3. Association of Edison Illuminating Companies (AEIC)
4. Canadian Standards Association (CSA)
5. Institute of Electrical and Electronic Engineers (IEEE)
6. Insulated Cable Engineers Association (ICEA)
7. International Electrical Testing Association (NETA)
8. National Electrical Manufacturer's Association (NEMA)
9. National Fire Protection Association (NFPA)
10. Occupational Safety and Health Administration (OSHA)
11. Underwriters Laboratory (UL)

1.04 ADMINISTRATIVE REQUIREMENTS

A. Coordination, Sequencing, and Scheduling: per Division 01 General Requirements.

1.05 SUBMITTALS

A. Submit in accordance with Division 01 General Requirements.

B. General

1. Contractor shall submit detailed test procedure including test equipment for all field acceptance testing prior to testing.

2. Contractor shall submit to the Engineer six copies of all test reports. Format and types of reports, data sheets, forms, etc. shall be submitted for approval.

3. Each test report shall include as minimum the following:

   a. Listing of equipment tested including the list of test equipment used and the test equipment's associated calibration dates

   b. Test method and standards governing the test

   c. Test results

   d. Recommendations

4. Test results shall incorporate inspection reports, instrument calibration curves, plotted test results, and all measurements and data.

5. All inspections, tests, and calibrations are to be reported in writing. The recorded data form shall have the signatures of the persons conducting the tests and authorized witnesses. The forms shall be designed to serve as the test and inspection checklist for inspection requirements. The test and checkout data shall also include any data taken prior to the adjustments, repairs, drying out, or similar Work prior to final testing and acceptance. As-found and as-left test data shall be recorded and reported in writing.

6. Copies of Test Data Reports shall be incorporated in each of the related Operations and Maintenance Manuals. The Data Reports shall include those items of equipment contained in the Service Manual. Reports shall be separated by a divider labeled Electrical Field Acceptance Tests. Reports shall contain data for all power conductors and controls including instrumentation conductors and devices for static and dynamic equipment in the Operations and Maintenance Manual. In addition, Operating Tests of the equipment shall be included in this section of the Operations and Maintenance Manual.

1.06 QUALITY ASSURANCE

A. Provide in accordance with Division 01 General Requirements.

B. Qualifications: per Division 01 General Requirements for testing and as follows.

1. The Contractor shall engage the services of a recognized independent testing agency approved by the Engineer to perform acceptance tests as specified herein.

a. The testing firm shall submit proof of the certification by NETS or NICET, and proof of the qualifications for the lead, on-Site technical person when requested.

2. The testing firm shall provide all material, equipment, labor, and technical supervision to perform such tests and inspections.

3. All cost associated with the testing shall be the responsibility of the Contractor, including the expenses of retest because of defects and failure of equipment to meet Specifications.

4. Wiring and equipment which is defective, or which fails to meet Specifications, shall be replaced by the Contractor, unless specific approval for repair is given by the Engineer. The Contractor shall bear the costs for either action.

5. Contractor shall open circuits, place and connect all instruments and equipment needed for the tests, remove same and restore circuits when tests are complete.

6. Coordinate activities, and cooperate with others on Project, to ensure that systems are energized when required, loads applied, and requirements of other Specification Sections are carried out on timely, coordinated basis.

7. Other Specification Sections may require services of one or more manufacturer's representatives, to ensure that equipment supplied has been installed properly and adjusted to proper working order. Advise representative of all applicable tests in this Section, so that Work will be coordinated, and tests combined where feasible.

8. Contractor shall notify the Engineer, in writing; at least 14 calendar days before the test are to take place. The tests shall be conducted in the presence of the Engineer or his representative and shall not be started without his permission.

9. Perform all tests as closely as possible to conditions of actual use.

10. All testing and checkout Work shall be performed with fully qualified personnel skilled in the particular tests being conducted. This is essential for obtaining and properly evaluating data while the tests are in progress and for insuring that important facts and questionable data are reported.

11. It is important that equipment warranties or guarantees not be voided by the Contractor's testing and checkout Work. The tests will normally be supplemental to and compatible with the manufacturer's installation instructions and recommendations. Where deviations are apparent, the manufacturer's review and approval shall be obtained prior to testing. Reasonable cooperation is to be extended to permit witnessing by the

manufacturer's representative if so requested. Where any questionable repairs, modifications, significant adjustments, tests or checks are to be made, the Contractor shall contact the Owner's Representative to determine if the Work should be performed by or with the manufacturer's representative.

12. The Contractor shall ensure that all testing and checkout Work is conducted in a safe manner. Special safety pre-cautions such as the following to be utilized where appropriate:

    a. Occupational Safety and Health Act (OSHA)

    b. Accident Prevention Manual for Industrial Operations, National Safety Council

    c. Applicable state and local safety operating procedures

    d. Owner safety procedures

    e. National Fire Protection Association (NFPA 70E)

    f. American National Standards for Personnel Protection

    g. Locking procedures

    h. Barricades

    i. Maintenance of voice communications

    j. Erection of warning signs

    k. Stationing of guards and watchmen

    l. De-energize and/or isolate equipment prior to testing. Exceptions must be thoroughly reviewed to identify safety hazards and devise adequate safeguards.

13. The sequence of all tests and checks shall be such that the equipment can be energized immediately after the completion of the applicable tests.

1.07 DELIVERY, STORAGE, AND HANDLING

A. Provide in accordance with Division 01 General Requirements.

1.08 SITE CONDITIONS

A. Existing Conditions: per Division 01 General Requirements.

PART 2 – PRODUCTS

2.01 MATERIALS

A. Test Equipment

1. Provide all necessary test equipment and tools as specified herein and as recommended by the tested equipment manufacturer.

2. All test equipment shall be in good mechanical and electrical conditions, and shall be calibrated per NETA ATS schedule requirements. Records, which show date and results of instrument calibration or testing, must be kept up-to-date and provided with the test report upon request.

3. The accuracy shall be directly traceable to the National Institute of Standards and Technology.

4. Calibrating standard shall be of higher accuracy than that of the instrument tested.

5. Test equipment shall include but not limited to and shall have operating accuracy equal to, or better than listed.

    a. Portable multimeters shall be true RMS measuring

    b. Multimeters shall have the following accuracy limits, or better (for 60 Hz where applicable):

        1) AC voltage ranges: 0.75 percent plus or minus 3 last single digits

        2) AC current ranges: 0.90 percent plus or minus 3 last single digits, including adapters, transducers

        3) DC voltage ranges: 0.25 percent plus or minus 1 last single digit

        4) Resistance ranges: 0.50 percent plus or minus 1 last single digit

        5) Frequency range: 0.10 percent plus or minus 1 last single digit

    c. Clamp-on ammeters: AC current plus or minus 3 percent of range plus or minus 1 last single digit

    d. Dissipation/power factor field equipment

        1) Plus or minus 0.1 percent power factor values up to 2.0 percent

        2) 5 percent of the reading for power factor values above 2

    e. Low-range DC resistance equipment: 1.0 percent of reading, plus or minus 2 last single digits

    f. Transformers turns-ratio test equipment: 0.5 percent or better

g. Ground electrode test equipment: plus or minus 2.0 percent of range

h. Insulation (Megger) test sets: 0 - 1000V DC plus or minus 20 percent of reading at mid-scale for equipment 600 volts and less and 0 - 2500 volts DC plus or minus 20 percent of reading at mid-scale for equipment over 600 volts.

i. Electrical load survey equipment

1) Plus or minus 5 percent total error, including sensors

2) 1 percent resolution

3) Current transformers plus or minus 2 percent of range

4) Voltage transformers plus or minus 0.5 percent of range

j. Liquid dielectric strength test equipment: plus or minus 2 percent of scale

k. Infrared scanning equipment: sensitivity of 2 degrees C

l. Phase shifting equipment: plus or minus 1 degree over entire range

m. High-current test equipment: plus or minus 2 percent of range

n. DC high potential test equipment: plus or minus 2 percent of scale

o. AC high potential test equipment: plus or minus 2 percent of scale

p. Multi-amp SR-90, or equal, relay test set

2.02 SOURCE QUALITY CONTROL

A. Provide in accordance with Division 01 General Requirements.

PART 3 – EXECUTION

3.01 CONSTRUCTION REQUIREMENTS

A. All tests shall be performed with regard to protecting solid-state devices and electronic components from potential damage. Where applicable, disconnect solid-state devices and electronic components prior to applying testing voltage.

B. Make up no connections at service entrance, transformers, substations, motors, motor control centers, and switchgear permanently until correct phase rotation of all equipment is determined and electrical tests have been completed. Install and insulate these connections temporarily, if necessary. Make permanent connections after proper rotation has been established and subsequent to completion of insulation resistance and dielectric tests.

C. Wire and cable insulation resistance tests

1. Low voltage, 600V maximum

    a. Inspect wire and cables for physical damage and proper connection in accordance with approved Shop Drawings.

    b. Check color-coding with Specifications and NEC standards.

    c. Perform continuity test to insure proper connection.

    d. Perform insulation-resistance test on each conductor with respect to ground and adjacent conductors. Applied potential shall be 1000 volts DC for 1 minute.

    e. Evaluate test results by comparison with wires and cables of the same length and type. Investigate any values less than 50 Megaohms.

D. Grounding Systems

1. Verify that grounding system is in accordance with Specifications and applicable codes.

2. The grounding system shall be tested for continuity of connection and for resistance to flow of current through ground connections.

    a. The resistance between the main grounding electrode and ground shall be no greater than 5 ohms for 600V systems. For electrical substation grounds, the ground resistance shall be no greater than 1 ohm.

    b. The ground resistance of conduits, equipment cases, and supporting frames shall be only fractionally higher than system ground.

    c. Method of measurement of ground resistance shall be as specified by NETA-AST and be approved by the Engineer before the start of tests.

E. Circuit Breakers - Low Voltage

1. Circuit breakers are to be checked for possible damage during shipment or storage.

2. Inspect the breaker visually for physical damage.

3. Perform several mechanical ON-OFF operations.

4. Perform circuit continuity check on each pole with the circuit breaker in the closed position.

5. Determine short-time pickup and delay, long-time pickup and delay by primary current injection.

6. Tests solid-state trip devices at multiple setting range of pickup and time delays.

7. Apply 300 percent of breaker rated continuous current to each pole to determine that the circuit breaker will trip on an overload.

F. Instrument Transformers

1. Inspect transformers for physical damage and nameplate information for compliance with Drawings and Specifications.

2. Verify proper connection of transformers with system requirements.

3. Verify tightness of all bolted connections and assure that adequate clearances exist between primary circuits to secondary circuit wiring.

4. Verify that all required grounding and shorting connections provide good contact.

5. Verify proper operation of transformer withdrawal mechanism (tip out) and grounding operation when applicable.

6. Electrical Tests - Current transformers

a. Perform insulation-resistance tests on current transformer secondary and wiring to-ground winding at 1000 volts DC for 1 minute. Value of test voltage on secondary wiring shall be 1000 volts DC for 1 minute. Do not perform this test with solid-state devices connected.

b. Perform a polarity test on each transformer winding, and verify manufacturer's polarity markings.

c. Perform a turns-ratio verification test of each current transformer.

d. The test data shall include the following:

1) Manufacturer's stated ratio for each tap position

2) Test turns ratio results

3) Percent error per tap position

4) Manufacturer's indicated polarity

5) Test result polarity

e. On each set of transformer windings, the turn’s ratio shall be determined for all no-loads taps, using the two-voltmeter method for control transformers and the two-ammeter method for current transformers.

f. Confirm test switch wiring and operation.

1) A functional test shall be performed on the test switch of the current transformer to ensure that the secondary leads are shorted and that no open circuit conditions exist. A functional test shall also be performed on the control transformers to ensure that no short circuit exists across the secondary leads.

2) All control wiring shall be checked to ensure proper operation of the device being powered.

g. Perform other tests specified by the NETA-ATS as required by application.

7. Electrical Tests - Voltage Transformers

a. Perform insulation-resistance tests on voltage transformers, winding-to-winding and windings-to-ground. Value of test voltage on secondary wiring shall be 500 volts DC for 1 minute. Do not perform this test with solid-state devices connected.

b. Perform a polarity test on each transformer to verify the polarity marks or H1-X1 relationship as applicable.

c. Perform ratio test as specified in NETA-ATS.

d. Perform a dielectric withstand test on the primary windings with the secondary windings connected to ground. The DC dielectric voltage shall be in accordance with Table Switchgear Insulation-Resistance Test Voltage above.

G. Metering and Instrumentation

1. Inspect all devices for physical damage and tightness of electrical connections.

2. Check calibration and accuracy of meters at 25/50/75/100 percent of full scale.

3. Verify all instrument multipliers.

H. Protective Relays

1. Inspect relays for physical damage and compliance with Drawings and Specifications.

2. Standard testing and calibration Specifications

a. To demonstrate that the relay will function as designed throughout the entire range of its operations. Acceptance tests shall be

performed in accordance with NETA-ATS Protective Relay Testing Specifications:

b. Calibrate and set relays in accordance with approved coordination study.

c. Use approved relay test set.

3. Perform insulation-resistance test on each circuit-to-frame.

4. Test all relays in place to demonstrate that the relaying system will function as specified. Acceptance tests shall be performed as specified and in accordance with NETA-ATS.

5. Test lockout relays and associated test switch trip links and closing circuit contacts. The lockout relays shall be functionally tested to ensure proper system operation. Associated equipment shall be checked for proper alignment and contact closure.

6. All relays shall be checked and calibrated under service conditions against portable standards devices connected in series with the relay-undergoing test. For some in-Service testing the test plugs shall be used to connect devices which shall measure the currents and voltage being applied to the relays.

7. Test all electrical interlocks.

a. Check all electrical interlocks for loose wiring, proper mechanical alignment, and operation. Also, inspect all contact surfaces to ensure they are clean and not pitted.

b. All relays shall be checked and calibrated using the built-in test switch and test plug.

1) Test for correct settings and operation of all relay trips and operation indicating flags and seal in contacts.

I. Operating Tests

1. Mechanical and electrical interlocks

a. Mechanical interlocks shall be examined to ensure the interlock is free to operate and that bearing surfaces are free to perform their intended function.

b. Checks for correct adjustment of primary disconnect mechanisms in plug-in units. Shall be mechanically interlocked with the door to ensure that the door is held closed with primary disconnect in the ON position.

c. Check for padlock provisions on disconnect operating mechanisms.

d. Check motor starters equipped with a defeater mechanism to ensure that they can be operated to release the door interlock with the disconnect device in the ON position.

2. Circuit Breaker Operation

a. Test trip all medium voltage circuit breakers from all devices in the trip circuit and verify operation of all interlocks.

b. Installation and inspection of 480V power circuit breakers shall be in accordance with NEMA Pub. No. SG-3:

1) Perform tests in accordance with NETA-ATS Specification and this Specification.

c. Test all remote control stations for operation.

1) A functional test shall be performed for all remote pushbutton stations and manual motor starters to ensure their proper operation.

2) Tests shall be as included in the appropriate standards.

3.02 FIELD QUALITY CONTROL

A. Provide in accordance with Division 01 General Requirements.

3.03 STARTUP & COMMISSIONING

A. Provide in accordance with Division 01 General Requirements.

3.04 CLOSEOUT ACTIVITIES

A. Provide in accordance with Division 01 General Requirements.

END OF SECTION

SECTION 26 21 00

LOW-VOLTAGE ELECTRICAL SERVICE ENTRANCE

PART 1 – GENERAL

1.01 SUMMARY

A. Section Includes

1. Provide the labor, tools, equipment, and materials necessary to provide service entrance Work as defined on the Drawings in accordance with this Section and applicable reference standards listed in Article 1.03.

B. Related Requirements

1. Division 26: Section 26 05 00 COMMON WORK RESULTS FOR ELECTRICAL

1.02 PRICE AND PAYMENT PROCEDURES

A. Measurement and payment requirements: per Division 01 General Requirements.

1.03 REFERENCES

A. Reference Standards

1. National Electrical Code (NEC), including Articles 230, 250, and 338
2. National Electrical Manufacturers Association (NEMA) Compliance
3. Underwriters' Laboratories, Inc. (UL) Compliance
   a. UL 50 Electrical Cabinets and Boxes
   b. UL 854 Service Entrance Cables
   c. UL 869 Electrical Service Equipment
4. Institute of Electrical and Electronic Engineers (IEEE) Compliance
5. American National Standards Institute (ANSI) Compliance

1.04 ADMINISTRATIVE REQUIREMENTS

A. Coordination, Sequencing, and Scheduling: per Division 01 General Requirements.

1.05 SUBMITTALS

A. Submit in accordance with Division 01 General Requirements.

B. Product Data

1. Furnish manufacturer's product data, test reports, and materials certification as required

2. Submit manufacturer's data on service entrance equipment and accessories

1.06 QUALITY ASSURANCE

A. Provide in accordance with Division 01 General Requirements.

A. Electric Utility Company: Eversource

1. Work Request #: 2757026

B. Install work in accordance with Utility Company's rules and regulations.

1.07 DELIVERY, STORAGE, AND HANDLING

A. Provide in accordance with Division 01 General Requirements.

1.08 SITE CONDITIONS

A. Existing Conditions: per Division 01 General Requirements.

A. The Contractor shall be responsible for providing and installing all service entrance conduit and conductors for associated service work as indicated on the Contract Drawings.

B. Services shall be wired for 120/240 volts, single phase, 3-wire, connected as indicated on the Contract Drawings.

PART 2 – PRODUCTS

2.01 MATERIALS

A. Provide service entrance equipment and accessories; of types, sizes, ratings and electrical characteristics indicated, which comply with utility and manufacturer's standard materials, design and construction.

B. Conductors

1. Copper conductors with XHHW insulation, 600 volt rated

2. Cable identifications shall indicate the manufacturer's name, wire size, insulation type, voltage, etc.

3. Spade connectors and lug extensions shall be provided as required to accommodate all service conductors at transformer.

C. Metering

1. Provide utility meter and meter enclosure for the building service as required by the local utility company.

2. Coordinate all metering requirements with utility company for a complete installation in accordance with the utility company's Specifications.

D. Manholes, Handholes and Pullboxes

1. Provide in accordance with Division 26 05 43 "Underground Ducts and Raceways for Electrical Systems".

2.02 SOURCE QUALITY CONTROL

A. Provide in accordance with Division 01 General Requirements.

PART 3 – EXECUTION

3.01 INSTALLATION

A. Provide and install required conduit wire, pullboxes, and accessory items to accomplish the Work involved in providing the electrical service as shown on the Drawings.

B. Coordinate service Work with the Owner and utility company to insure proper timing of installation and connection of equipment.

C. Obtain all permits, pay all fees, and provide all materials and labor necessary for interfacing with utility equipment to install electric service.

D. Furnish and install all electrical conduits for low voltage cables, and low voltage wire and accessory items necessary to accomplish the Work detailed in the Drawings.

E. Furnish and install utility meter, meter enclosure, and all associated metering conduits in accordance with the utility company's requirements.

F. Primary wiring and terminations shall be by the utility company. All conductors shall be terminated at the pole-mounted transformer secondary by the utility company.

3.02 FIELD QUALITY CONTROL

A. Provide in accordance with Division 01 General Requirements.

3.03 STARTUP & COMMISSIONING

A. Provide in accordance with Division 01 General Requirements.

3.04 CLOSEOUT ACTIVITIES

A. Provide in accordance with Division 01 General Requirements.

END OF SECTION

SECTION 26 27 26

WIRING DEVICES

PART 1 - GENERAL

1.01 SUMMARY

A. The Contractor shall provide the labor, tools, equipment, and materials necessary to furnish and install wiring devices in accordance with the plans and as specified herein.

B. This section includes the following:

1. Flush Wiring Devices
2. Control Relays
3. Motor Control Relays/Contactors
4. Control Stations

1.01 PRICE AND PAYMENT PROCEDURES

A. Measurement and payment requirements: per Division 01 General Requirements.

1.02 RELATED DOCUMENTS

A. Drawings and general provisions of the Contract, including General and Supplementary Conditions and Division 01 specification sections, apply to this section.

B. Related Sections

1. Division 26: Section 26 05 00 COMMON WORK RESULTS FOR ELECTRICAL
2. Division 26: Section 26 05 19 LOW-VOLTAGE ELECTRICAL POWER CONDUCTORS AND CABLES
3. Division 26: Section 26 05 26 GROUNDING AND BONDING FOR ELECTRICAL SYSTEMS
4. Division 26: Section 26 05 34 RACEWAYS, BOXES & SUPPORTING DEVICES

1.03 REFERENCES

A. Reference Standards

1. NATIONAL ELECTRICAL CODE (NEC)

2. UNDERWRITER'S LABORATORIES, INC. (UL)

3. NATIONAL ELECTRICAL MANUFACTURERS ASSOCIATION (NEMA) COMPLIANCE

1.02 ADMINISTRATIVE REQUIREMENTS

A. Coordination, Sequencing, and Scheduling: per Division 01 General Requirements.

1.04 SUBMITTALS

A. Furnish manufacture's product data, test reports, and materials certifications in accordance with Division 01 General Requirements.

1.03 QUALITY ASSURANCE

A. Provide in accordance with Division 01 General Requirements.

1.04 SITE CONDITIONS

A. Existing Conditions: per Division 01 General Requirements.

PART 2 - PRODUCTS

2.01 FLUSH WIRING DEVICES

A. Wall Switches

1. Wall Switches shall be specifications grade, toggle operated, quiet type alternating current (ac) switches, NEMA heavy duty class, rated at 20 ampere, 120/277 v. Provide matching two pole, 3-way or 4-way switches as indicated. Switches shall be white in color. Comply with UL 20 and NEMA Standards.

2. Where two or more switches are to be installed at the same location, they shall be mounted in one-piece ganged switch boxes, with appropriate gang cover plate.

3. Provide waterproof switches where indicated.

B. Receptacles

1. Convenience receptacles for interior use shall be specification grade, industrial heavy duty type, 20-ampere, 125-volt ac, 2-pole, 3-wire, back wiring, metal plaster ears, single, duplex (as indicated) grounded, conforming to NEMA FB 11, NEMA WD 1 and to the 5-20R configuration in NEMA WD 6. Receptacles shall be white in color. Provide waterproof in-use covers where indicated and required.

2. Ground Fault Interrupter (GFI) Receptacles shall be specification grade. Provide 20 ampere, "feed through" type ground fault circuit interrupter, with integral heavy duty NEMA 5 20R duplex receptacles arranged to protect connected downstream receptacles on same circuit. Provide unit designed for installation in a 2 3/4-inch-deep outlet box without adapter, grounding type, Class A, Group 1. Receptacles shall be white in color. Provide waterproof in-use covers where indicated and required.

3. Locking receptacles shall conform to NEMA WD 6. One (1) plug shall be furnished with each locking receptacle.

4. Receptacles shall meet the requirements for retention of plugs, overload, temperature, and assembly security in accordance with NEMA WD 1.

5. Special purpose outlets: NEMA heavy duty class, grounding type with matching plug. Coordinate NEMA type with equipment manufacturer.

C. Weatherproof Device Plates

1. Provide weatherproof device plates where indicated and required.

2. Interior and Exterior Wet Locations: Device plates for interior and exterior wet locations shall be die-cast aluminum, gasket, with corrosion resistant screws to match plate cover finish. Provide weatherproof receptacles with heavy-duty vertical “while-in-use” covers for complete weatherproofing when plug is inserted.

3. Furnish receptacle and associated device plate integral to light pole.

2.02 CONTROL RELAYS

A. Control Relays: Allen Bradley Bulletin 700-H Series, Square D or equal.

B. 240VAC coil or as indicated.

C. Number of poles as indicated or required.

D. Electrically Held, except as noted.

E. Enclosure shall be NEMA-1, except as noted.

2.03 SOURCE QUALITY CONTROL

A. Provide in accordance with Division 01 General Requirements.

PART 3 - EXECUTION

3.01 WIRING DEVICES

A. Wall Switches and Receptacles

1. Wall switches and receptacles shall be so installed that when device plates are applied, the plates will be aligned vertically to within 1/16-inch.

2. Ground terminal of each flush-mounted receptacle shall be bonded to the outlet box with an approved green bonding jumper.

B. Device Plates

1. Device plates and receptacle cover plates for receptacles and light switches shall be suitably labeled, identifying the circuit number and the panel name; for example: RP1-12.

2. Device plates shall be identified on the inside of the plate by circuit number and panelboard.

C. Control Stations

1. Mount equipment so that sufficient access and working space is provided for ready and safe operation and maintenance.

2. Securely fasten equipment to walls or other surfaces on which they are mounted. Provide independent galvanized steel supports where no wall or other surface exists.

3. Install in conformance with National Electrical Code.

3.02 FIELD QUALITY CONTROL

A. Provide in accordance with Division 01 General Requirements.

3.03 STARTUP & COMMISSIONING

A. Provide in accordance with Division 01 General Requirements.

3.04 CLOSEOUT ACTIVITIES

A. Provide in accordance with Division 01 General Requirements.

END OF SECTION

SECTION 26 28 16

ENCLOSED SWITCHES AND CIRCUIT BREAKERS

PART 1 – GENERAL

1.01 SUMMARY

A. This Section includes individually mounted enclosed switches and circuit breakers used for the following:

1. Service disconnecting means.

2. Feeder and branch-circuit protection.

3. Motor and equipment disconnecting means.

1.02 PRICE AND PAYMENT PROCEDURES

A. Measurement and payment requirements: per Division 01 General Requirements.

1.03 RELATED DOCUMENTS

A. Drawings and general provisions of the Contract, including General and Supplementary Conditions and Division 01 Specification Sections, apply to this Section.

B. Division 26, Section 26 05 00 COMMON WORK RESULTS FOR ELECTRICAL

C. Division 26, Section 26 05 26 GROUNDING AND BONDING FOR ELECTRICAL SYSTEMS

1.04 ADMINISTRATIVE REQUIREMENTS

A. Coordination, Sequencing, and Scheduling: per Division 01 General Requirements.

1.05 SUBMITTALS

A. Product Data: For each type of switch, circuit breaker, accessory, and component indicated. Include dimensions and manufacturers' technical data on features, performance, electrical characteristics, ratings, and finishes.

B. Shop Drawings: For each switch and circuit breaker.

1. Dimensioned plans, elevations, sections, and details, including required clearances and service space around equipment. Show tabulations of installed devices, equipment features, and ratings. Include the following:

a. Enclosure types and details.

b. Current and voltage ratings.

c. Short-circuit current rating.

d. UL listing for series rating of installed devices.

e. Features, characteristics, ratings, and factory settings of individual over-current protective devices and auxiliary components.

f. Time-current curves, including selectable ranges for each type of circuit breaker.

2. Wiring Diagrams: Power, signal, and control wiring. Differentiate between manufacturer-installed and field-installed wiring.

C. Field Test Reports: Submit written test reports and include the following:

1. Test procedures used.

2. Test results that comply with requirements.

3. Results of failed tests and corrective action taken to achieve test results that comply with requirements.

D. Manufacturer's field service report.

E. Maintenance Data: For enclosed switches and circuit breakers and for components to include in maintenance manuals specified in Division 01. In addition to requirements specified in Division 01 Section 01 70 00 EXECUTION & CLOSEOUT REQUIREMENTS include the following:

1. Routine maintenance requirements for components.

2. Manufacturer's written instructions for testing and adjusting switches and circuit breakers.

3. Time-current curves, including selectable ranges for each type of circuit breaker.

1.06 QUALITY ASSURANCE

A. Electrical Components, Devices, and Accessories: Listed and labeled as defined in NFPA 70, Article 100, by a testing agency acceptable to authorities having jurisdiction, and marked for intended use.

B. Comply with NEMA AB 1 and NEMA KS 1.

C. Comply with UL #98, Enclosed Switches and UL #508, Industrial Control Equipment.

D. Federal Specification W-S-865- Heavy Duty Switches

E. Comply with NFPA 70.

F. Product Selection for Restricted Space: Drawings indicate maximum dimensions for enclosed switches and circuit breakers, including clearances between enclosures, and adjacent surfaces and other items. Comply with indicated maximum dimensions.

1.07 PROJECT CONDITIONS

A. Environmental Limitations: Rate equipment for continuous operation under the following conditions, unless otherwise indicated:

B. Ambient Temperature: Not less than minus 22 degrees F (minus 30 degrees C) and not exceeding 104 degrees F (40 degrees C)

C. Altitude: Not exceeding 6600 feet (2000 m)

1.08 COORDINATION

A. Coordinate layout and installation of switches, circuit breakers, and components with other construction, including conduit, piping, equipment, and adjacent surfaces. Maintain required workspace clearances and required clearances for equipment access doors and panels.

1.09 SITE CONDITIONS

A. Existing Conditions: per Division 01 General Requirements.

PART 2 – PRODUCTS

2.01 MANUFACTURERS

A. Manufacturers: Subject to compliance with requirements, provide products by one of the following:

B. Square D Co.

C. Eaton Corp.; Cutler-Hammer Products

D. General Electric Co.; Electrical Distribution & Control Division

E. Approved Equal

2.02 ENCLOSED SWITCHES

A. Enclosed, Non-fusible Switch: NEMA KS 1, heavy duty type with lockable handle.

B. Rating: Voltage and number of poles as required for motor or equipment circuits being disconnected. Switches used for service entrance equipment shall bear a UL label and be rated for service entrance equipment.

C. Enclosed, Fusible Switch, 800A and Smaller: NEMA KS 1, heavy duty type with clips to accommodate specified fuses, lockable handle with two padlocks, and interlocked with cover in closed position.

D. Double Throw Safety Switches shall be unfused double throw with center OFF position, quick make, quick break mechanism, visible blades in the OFF position and safety handle. Rating, voltage and number of poles as required for the circuits being disconnected.

2.03 ENCLOSED CIRCUIT BREAKERS

A. Molded-Case Circuit Breaker: NEMA AB 1, with interrupting capacity to meet available fault currents. Thermal-Magnetic Circuit Breakers: Inverse time-current element for low-level overloads, and instantaneous magnetic trip element for short circuits. Adjustable instantaneous, magnetic trip setting for circuit-breaker frame sizes 150 Amp through 400 Amp.

B. Molded-Case Circuit-Breaker Features and Accessories: Standard frame sizes, trip ratings, and number of poles. Lugs shall be mechanical style suitable for number, size, trip ratings, and material of conductors.

C. Application Listing: Appropriate for application; Type SWD for switching fluorescent lighting loads; Type HACR for heating, air-conditioning, and refrigerating equipment.

D. Electronic Trip Unit Circuit Breakers (Frame sizes 400 Amp and larger): RMS sensing, interchangeable harmonic trip unit, LED trip indicators with the following field-adjustable settings:

1. Long-time pickup levels and adjustments (L)

2. Short-time pickup levels adjustments (S)

3. Instantaneous trip adjustments (I)

4. Ground fault pickup level, time delay, I2t response and adjustments (G)

E. The circuit breaker operating handle shall be externally operable with the operating mechanism being an integral part of the box, not the cover. Provisions for padlocking the circuit breaker in the OFF position shall be provided. Enclosures shall have a dual cover interlock mechanism to prevent unintentional opening of the enclosure cover when the circuit breaker is ON and prevent turning the circuit breaker ON when the enclosure cover is open. The cover interlock mechanism shall have an externally operated override but the override shall not

permanently disable the interlock mechanism. The tool used to override the cover interlock mechanism shall not be required to enter the enclosure in order to override the interlock.

2.04 DOUBLE THROW SAFETY SWITCHES

A. Unfused, double throw with center OFF position, quick make, quick break mechanism, visible blades in the OFF position and safety handle. Rating, voltage and number of poles as required for the circuits being disconnected.

2.05 ENCLOSURES

A. NEMA AB 1 and NEMA KS 1 to meet environmental conditions of installed location.

1. Outdoor Locations: NEMA Type 4X, stainless steel

2. Wet or Damp Locations: NEMA Type 4X, stainless steel

3. Indoor Dry Locations: NEMA Type 1

4. Indoor Dusty Locations: NEMA Type 12

5. Reference Section 26 05 33 RACEWAYS AND BOXES FOR ELECTRICAL SYSTEMS.

2.06 FACTORY FINISHES

A. Manufacturer's standard prime-coat finish ready for field painting.

B. Finish: Manufacturer's standard grey paint applied to factory-assembled and - tested enclosures before shipping.

PART 3 – EXECUTION

3.01 EXAMINATION

A. Examine elements and surfaces to receive enclosed switches and circuit breakers for compliance with installation tolerances and other conditions affecting performance. Proceed with installation only after unsatisfactory conditions have been corrected.

3.02 INSTALLATION

A. Mount equipment so that sufficient access and working space is provided for ready and safe operation and maintenance.

B. Securely fasten equipment to walls or other structural surfaces on which they are mounted. Provide independent galvanized steel supports where no wall or other structural surface exists

C. Temporary Lifting Provisions: Remove temporary lifting eyes, channels, and brackets and temporary blocking of moving parts from enclosures and components.

D. Install in conformance with National Electrical Code.

3.03 IDENTIFICATION

A. Identify field-installed conductors, interconnecting wiring, and components; provide warning signs as specified in Division 26.

B. Enclosure Nameplates: Label each enclosure with engraved metal or laminated-plastic nameplate mounted with corrosion-resistant screws.

C. For double throw switches identify source of each service identify source of each service.

3.04 CONNECTIONS

A. Install equipment grounding connections for switches and circuit breakers with ground continuity to main electrical ground bus.

B. Install power wiring. Install wiring between switches and circuit breakers, and control and indication devices.

C. Tighten electrical connectors and terminals according to manufacturer's published torque-tightening values. If manufacturer's torque values are not indicated, use those specified in UL 486A and UL 486B.

3.05 FIELD QUALITY CONTROL

A. Testing: After installing enclosed switches and circuit breakers and after electrical circuitry has been energized, demonstrate product capability and compliance with requirements.

B. Procedures: Perform each visual and mechanical inspection and electrical test indicated in NETA ATS, Section 7.5 for switches and Section 7.6 for molded-case circuit breakers. Certify compliance with test parameters.

C. Correct malfunctioning units on-site, where possible, and retest to demonstrate compliance; otherwise, replace with new units and retest.

3.06 CLEANING

A. On completion of installation, inspect interior and exterior of enclosures. Remove paint splatters and other spots. Vacuum dirt and debris; do not use compressed air to assist in cleaning. Repair exposed surfaces to match original finish.

3.07 CLOSEOUT ACTIVITIES

A. Provide in accordance with Division 01 General Requirements.

END OF SECTION

SECTION 26 56 00

EXTERIOR LIGHTING

PART 1 – GENERAL

1.01 SUMMARY

A. Section Includes:

1. Luminaires
2. Light Sources
3. Time switch
4. Photocell controls
5. Poles and brackets

B. Related Documents:

1. Division 26: Section 26 05 00 COMMON WORK RESULTS FOR ELECTRICAL
2. Division 26: Section 26 05 33 RACEWAYS AND BOXES FOR ELECTRICAL SYSTEMS
3. Division 26: Section 26 05 26 GROUNDING AND BONDING FOR ELECTRICAL SYSTEMS

1.02 PRICE AND PAYMENT PROCEDURES

A. Measurement and payment requirements: per Division 01 General Requirements.

1.03 REFERENCES

A. Furnish products listed by Underwriters Laboratories, Inc., ETL Testing Laboratories, or other testing firm acceptable to the Owner.

B. Conform to requirements of ANSI/NFPA 70.

C. Conform to requirements of NFPA 101.

1.04 ADMINISTRATIVE REQUIREMENTS

A. Coordination, Sequencing, and Scheduling: per Division 01 General Requirements.

1.05 SUBMITTALS

A. Submit in accordance with the Division 01 General Requirements.

B. Submit shop drawings, product data, test data, warranties, and other information as appropriate for the following:

1. Luminaires
2. Light sources
3. Time switch
4. Photocell controls
5. Poles
6. Pole bases

C. Shop Drawings: Indicate construction details for products which are not manufacturer's standard, when product data does not adequately describe fixture physical characteristics, or upon request by Engineer.

D. Product Data: Provide product data for each luminaire and lighting unit.

E. For LED lighting fixtures, submit US DOE LED Lighting Facts label, and IES L70 rated life.

F. Submit luminaire shop drawings in booklet form with a separate sheet for each luminaire type. Indicate clearly on each sheet the proposed luminaire "type" designation, manufacturer, luminaire lamp, and ballast designation.

G. Submittals shall indicate materials, finishes, metal gauges, overall and detail dimensions, sizes of electrical and mechanical connections, fasteners, welds, joints, end conditions, provisions for the work of others and similar information.

H. A photometric test report showing photometric candlepower distribution, brightness, coefficients of utilization, and paint reflectance shall be included for all fixtures. Photometric reports shall be prepared for actual fixture, lamp, lens, and ballast combination. Certify data as that taken under National Bureau of Standards calibrated test conditions according to standards of the Illuminating

Engineering Society; upon request, submit photometric test of proposed fixture prepared by an independent testing laboratory such as ETL.

I. The submittals shall state whether or not the fixture, as an assembly, has been UL tested and approved.

J. Upon request, submit sample products for inspection. Provide luminaires identical with approved samples; retain approved samples at site for comparison until after all other luminaires have been shipped to site and installed. Transportation charges for samples shall be paid by Contractor. Unapproved samples will be returned at Contractor's expense. Upon notification of disapproval, immediately submit new samples that meet contract requirements.

K. Upon request by Engineer, provide computerized illumination calculation data for specified interior or exterior areas in digital or ISO foot-candle format and in such detail as requested.

L. Operating and Maintenance Instructions: Provide maintenance and operating instructions for battery powered lighting units. Include technical data sheets and parts ordering information for components used in all luminaires.

M. Closeout and Maintenance Material Submittals: per Division 01 General Requirements.

1.06 QUALITY ASSURANCE

A. Provide in accordance with Division 01 General Requirements.

B. Warranty all lighting and components for one year after acceptance of the work and at no additional cost to the Owner, promptly provide and install replacements for luminaires or components which are defective in materials or workmanship; or repair installed equipment at the job site as necessary to restore first class operating condition. For any time during the warranty period that luminaires are not fully functional due to defects in materials or workmanship, provide, install, and remove suitable temporary lighting. Warrant replacement luminaires in a similar manner for a period of one year following replacement including replacement of defective replacements.

C. Warrant ballasts, batteries, and occupancy sensors as further specified herein.

D. Provide products of firms regularly engaged in the manufacture of interior luminaires or components of similar types and ratings to those required. Such products shall have been in satisfactory use in similar applications for not less than two years.

1.07 DELIVERY, STORAGE AND HANDLING

A. Provide in accordance with Division 01 General Requirements.

B. Deliver luminaires and their components to job site, factory assembled and wired to the greatest extent practical, in strict accordance with approved shop drawings, samples, certificates and catalog cuts.

C. Protect exposed finishes during manufacture, transport, storage and handling; replace damaged materials.

D. Luminaires shall be stored under cover, above the ground, in clean, dry areas, and be tagged and/or marked as to type and site destination.

1.08 SITE CONDITIONS

A. Existing Conditions: per Division 01 General Requirements.

PART 2 – PRODUCTS

2.01 GENERAL

A. Provide lighting fixtures as listed on the Lighting, Lamping, and Fixture Schedule on the drawings and as specified herein that meet the performance and quality standard for that fixture. Substitutes shall be equal in all respects including mechanical, electrical, physical, performance, photometric, and quality characteristics except minor variances in construction details which do not affect overall quality or performance are permitted.

B. Accessories: Provide required accessories for mounting and operation of each luminaire as indicated.

2.02 LUMINAIRES

A. Luminaires shall be weatherproof, heavy duty, outdoor types designed for efficient light utilization, adequate dissipation of lamp and ballast heat, and safe cleaning and maintenance.

B. Housing: die cast A380 Aluminum, c/w a watertight grommet, mechanically assembled to a bracket with four bolts 5/16 18 UNC.

C. Illumination distribution patterns, BUG ratings and cutoff types as defined by the IESNA shall be as shown on the drawings.

D. Lenses shall be frame-mounted, heat-resistant, clear glass tempered flat lens on a hinged frame. Optical system shall include a sealed construction with minimum IP66 rating with tool free access.

E. Pre-wire internal components to terminal strips at the factory.

F. Bracket-mounted luminaires shall have leveling provisions and clamp-type adjustable slip-fitters with locking screws.

G. Materials shall be rustproof. Latches and fittings shall be non-ferrous metal.

H. Provide manufacturer's standard finish, as scheduled on the drawings. Where indicated on drawings, match finish process and color of pole or support materials.

I. Reference light fixture schedule within drawings for fixture manufacturer and model information.

J. Luminaires shall carry factory labels, showing complete, specific lamp and ballast information.

2.03 LIGHT SOURCES

A. Install the proper lamps in every luminaire installed and every existing luminaire relocated or reinstalled as shown on the drawings.

B. LED sources shall meet the following requirements:

1. Operating temperature rating shall be between -40 degrees C (-40 degrees F) and 50 degrees C (120 degrees F).

2. Correlated Color Temperature (CCT): 3000K - 4000K. As approved by the Town.

3. Color Rendering Index (CRI): ≥ 70.

4. The manufacturer shall have performed reliability tests on the LEDs luminaires complying with Illuminating Engineering Society (IES) LM79 for photometric performance and LM80 for lumen maintenance and L70 life.

2.04 LED DRIVERS

A. LED drivers shall meet the following requirements:

1. Drivers shall have a minimum efficiency of 85%.

2. Starting Temperature: -40 degrees C (-40 degrees F).

3. Input Voltage: 120 to 480 (±10%) volt.

4. Power Supplies: Class I or II output.

5. Surge Protection: The system must survive 250 repetitive strikes of “C Low” (C Low: 6kV/1.2 x 50 µs, 10kA/8 x 20 µs) waveforms at 1-minute intervals with less than 10% degradation in clamping voltage. “C Low” waveforms are as defined in IEEE/ASNI C62.41.2-2002, Scenario 1 Location Category C.

6. Power Factor (PF): ≥ 0.90.

7. Total Harmonic Distortion (THD): ≤ 20%.

8. Comply with FCC Title 47 CFR Part 18 Non-consumer RFI/EMI Standards.

9. Driver rated life: 50,000 hours

10. LED rated life: L70 = 100,000 hrs (@ ambient temperature = 25 degrees C and forward current = 700mA)

2.05 TIME SWITCH

A. Digital multi-purpose, 277 volts, 2 channel, 7 day, 365 day advance single and block holiday time switch. Provide switch with battery backup to maintain accurate time for a minimum of 72 hours following power failure. Provide time switch with a manual on-off bypass switch. Housing for the time switch shall be surface mounted, NEMA 1 enclosure conforming to NEMA ICS 6.

2.06 PHOTOCELL SWITCH

A. UL 773 or UL 773A, hermetically sealed cadmium-sulphide cell rated 240 volts ac, 60 hertz with single-throw contacts rated 1000 watts, and 600 volts.

B. Mount switch in a cast weatherproof aluminum housing, with swivel arm mount, in a high impact resistant, noncorroding and nonconductive molded plastic housing, with an EEI-NEMA locking-type receptacle.

C. The switch shall turn on below 3 footcandles and off at 3 to 10 footcandles. A time delay shall prevent accidental switching from transient light sources. Mount a directional lens in front of the cell to prevent fixed light sources from creating a turnoff condition. Aim switch according to manufacturer's recommendations.

2.07 POLES

A. Provide poles designed for wind loading of 100 miles per hour determined in accordance with AASHTO LTS-2 while supporting luminaires having effective projected areas for fixtures indicated. A 30% gust factor shall be included. Poles shall be anchor base type designed for use with underground supply conductors. Anchor bolts shall be steel rod having a minimum yield strength of 50,000 psi; the top 12 inches of the rod shall be galvanized per ASTM A 153.

B. Aluminum Poles: Provide aluminum poles manufactured of corrosion resistant aluminum alloys conforming to AASHTO LTS-2 for Alloy 6063-T6 or Alloy 6005-T5 for wrought alloys and Alloy 356-T4 (3,5) for cast alloys.

C. Poles shall include a 4” diameter, tube of seamless extruded aluminum welded to both the top and bottom of a cast-aluminum anchor plate. The pole shall also

include a decorative base cover made from two cast-aluminum pieces fastened together with stainless steel hardware around the base of the pole. Base cover shall include door for access to maintenance opening.

D. Furnish pole with Duplex GFI receptacles with heavy-duty weatherproof while in use covers.

E. Provide a pole grounding connection designed to prevent electrolysis when used with copper ground wire.

F. Joint and base cover shall be made from two pieces of cast aluminum mechanically fastened with stainless steel screws.

G. Finish shall include "hot dip" chemical etching preparation, Lumital™ polyester powder coat textured finish. Finish shall include durable, UV-resistance exterior finish as per # ASTM G7 and salt spray resistance according to # ASTM B117 testing procedures. Finish shall also meet ASTM D2247 68 standards.

H. Pole color: Black

I. Pole manufacturer shall match fixture manufacturer, unless otherwise approved by the owner and engineer.

2.08 FOUNDATIONS FOR POLES

A. Foundations shall be pre-cast concrete, having 3000 psi minimum 28-day compressive strength.

B. Foundations shall support the effective projected area of the specified pole, arm(s), luminaire(s), and accessories, such as shields, banner arms, and banners, under wind conditions previously specified in this section.

C. Place concrete in spirally-wrapped treated paper forms for round foundations, and construct forms for square foundations.

D. Rub-finish and round all above-grade concrete edges to approximately 6 mm (0.25-inch) radius.

E. Anchor bolt assemblies and reinforcing of concrete foundations shall be as shown on the drawings. Anchor bolts shall be in a welded cage or properly positioned by the tiewire to stirrups.

F. Prior to concrete pour, install electrode per Section 26 05 26, GROUNDING AND BONDING FOR ELECTRICAL SYSTEMS.

2.09 SOURCE QUALITY CONTROL

A. Provide in accordance with Division 01 General Requirements.

PART 3 – EXECUTION

3.01 INSTALLATION

A. Luminaire Pole Bases: Construct as indicated on drawings. Furnish pole bases to site contractor for installation under Division 2, coordinate installation. Install poles centered, with no base overlap, on bases plumb; provide for adjustment.

B. Provide anchor bases with galvanized steel anchor bolts, threaded at the top end and bent 90 degrees at the bottom end. Provide galvanized nuts, washers, and ornamental covers for anchor bolts. Concrete for anchor bases, polyvinyl chloride (PVC) conduit ells, and ground rods shall be as specified in Section 260526.

C. Thoroughly compact backfill with compacting arranged to prevent any pressure between conductor, jacket, or sheath and the end of conduit ell. Adjust poles as necessary to provide a permanent vertical position with the bracket arm in proper position for luminaire location.

D. Grounding: Ground noncurrent-carrying parts of equipment, including metal poles. Where the copper grounding conductor is connected to a metal other than copper, provide specially treated or lined connectors suitable for this purpose.

E. Insulation Resistance Test: Perform before and after connection of fixtures and equipment.

F. Ground Resistance Tests: Perform ground continuity test.

G. Field Tests: Upon completion of installation, conduct an operating test to show that the equipment operates in accordance with the requirements of this specification section.

3.02 ADJUSTING AND CLEANING

A. Clean lenses and diffusers at completion of work.

B. Aim adjustable luminaires and lampholders as indicated or as directed.

C. Clean paint splatters, dirt, and debris from installed luminaires.

D. Touch up luminaire and pole finish at completion of work.

E. Replace any faulty drivers

F. Verify accurate and consistent color temperature via visual inspection in low light conditions

3.03 FIELD QUALITY CONTROL

A. Provide in accordance with Division 01 General Requirements.

3.04 STARTUP & COMMISSIONING

A. Provide in accordance with Division 01 General Requirements.

3.05 CLOSEOUT ACTIVITIES

A. Provide in accordance with Division 01 General Requirements.

END OF SECTION

SECTION 310000

EARTHWORK

PART 1 – GENERAL

1.01 SUMMARY

A. Section Includes

1. Provide excavating, filling, backfilling, stockpiling, bedding, compacting, grading, protection, installation and removal of support of excavation and other Work necessary for the construction of pipelines, structures, pavements, and appurtenant Work in accordance with this Section, the Drawings and applicable reference standards listed in Article 1.03.

1.02 REFERENCES

A. Reference Standards

1. ASTM D698: Standard Test Methods for Laboratory Compaction Characteristics of Soil Using Standard Effort (12 400 ft-lbf/ft3 (600 kN-m/m3))

2. ASTM D1556: Density and Unit Weight of Soil in Place by the Sand-Cone Method

3. ASTM D1557: Laboratory Compaction Characteristics of Soil Using Modified Effort

4. ASTM D6938: Standard Test Method for In-Place Density and Water Content of Soil and Soil-Aggregate by Nuclear Methods (Shallow Depth)"

5. ASTM D2922: Density of Soil and Soil Aggregate in Place by Nuclear Methods (Shallow Depth)

6. AASHTO T11: Standard Specification for Materials Finer Than 75-Micrometer (No. 200) Sieve in Mineral Aggregates by Washing

7. AASHTO T 27: Standard Method of Test for Sieve Analysis of Fine and Coarse Aggregates

8. 29 CFR, Chapter XVII — Occupational Safety and Health Administration, Department of Labor

1.03 ADMINISTRATIVE REQUIREMENTS

A. Coordination, Sequencing, and Scheduling: per Division 01 General Requirements.

1.04 SUBMITTALS

A. Submit in accordance with the Division 01 General Requirements.

1. Product Data

B. Closeout and Maintenance Material Submittals: per Division 01 General Requirements.

C. Test Reports

1. Material gradations

2. Backfill material moisture-density relationships

3. Field compaction testing

D. Source and Field Quality Control Submittals.

E. Closeout and Maintenance Material Submittals: per Division 01 General Requirements.

1.05 QUALITY ASSURANCE

A. Provide in accordance with Division 01 General Requirements.

1.06 DELIVERY, STORAGE, AND HANDLING

A. Provide in accordance with Division 01 General Requirements.

1.07 SITE CONDITIONS

A. Site Information: Data on indicated subsurface conditions are not intended as representations or warranties of accuracy or continuity between soil borings. It is expressly understood that Owner will not be Responsible for interpretations or conclusions drawn therefrom by Contractor. Data is made available for convenience of Contractor. Additional test borings and other exploratory operations may be made by Contractor at no cost to Owner.

B. Existing Utilities: The locations of existing underground utilities shown on the Drawings have been determined from available plans, physical survey, information provided by local utilities or a combination thereof and are approximate only. The Owner or its representative in no way warranties that the locations shown are correct. The Contractor shall be Responsible for determining the exact location of all existing utilities before commencing Work, and agrees to be fully responsible for any and all damages resulting from Contractor's failure to exactly locate and preserve any and all underground utilities.

C. Where existing structures and utilities not shown on the Drawings interfere with new construction, notify the Owner of the location of the structure or utility and reroute or relocate the structure or utility as directed by the Owner.

D. Exercise care by hand excavating to locate all existing structures and utilities. Utilities which do not interfere with the Work shall be carefully protected against damage. Structures or utilities damaged in any way by the Contractor's operations shall be restored or replaced with new material of the same size and type at the Contractor's expense.

E. Provide temporary supports of approved design for structures and utilities crossing over the Work. Provide bedding and blanket material in accordance with the utilities' rules and Regulations and acceptable to the Owner for structures and utilities crossing over the Work. Compact material to adequately support and protect the utility crossing from damage. Temporary supports, bedding and blanket material and compaction shall be considered incidental to the Work.

F. Refer to Division 01 General Requirements.

1.08 DEFINITIONS

A. Excavation shall mean the excavation, removal, stockpiling, and/or satisfactory disposal of all materials encountered within the limits indicated or specified other than rock or ledge. Excavated materials shall include, but not be limited to earth materials such as peat, organic or inorganic silts, clay, sand, gravel, pavements, urban fill materials, coal, coal ash, cobble and boulders less than one (1) cubic yard in volume, soft or disintegrated rock which, in the opinion of the Engineer, can be removed without blasting or drilling; pavement, brick and concrete masonry, and all obstructions not specifically excluded in the contract documents.

B. Unsuitable backfill materials are defined as topsoil, organic matter, peat, organic and inorganic silts, frozen materials, debris, coal, coal ash, brick in excess of 2% by volume, or any combination thereof having unsuitable in-situ bearing properties; and all materials that are too loose or saturated to provide satisfactory bearing when used for backfill.

C. Contaminated soil is soil/fill material that has been determined through sampling and laboratory analysis to have concentrations of constituents of concern above the CTDEEP Remediation Standard Regulations (RSR) baseline soil criteria. For this Site these criteria being the Residential Direct Exposure Criteria (RDEC) and the Pollutant Mobility Criteria in a GB classified aquifer (GBPMC).

There are two qualifiers for disposal purposes that are applicable to contaminated soil, which include non-hazardous and hazardous as defined by the RCRA.

Polluted Soil is soil that has been determined through sampling and laboratory analysis to have detectable concentrations of constituents of concern, and may be below the RSR baseline soil criteria for RDEC and/or GAPMC.

Controlled Material Soil includes Polluted Soil and Contaminated Soil as defined above.

PART 2 – PRODUCTS

2.01 MATERIALS

A. General

1. Suitable materials: As shown on the Drawings or as specified.

2. Unsuitable materials: material containing excessive clay, vegetation, organic matter, debris, pavement, stones or boulders over 6 inches in greatest dimension, wet or frozen material, and material, which in the opinion of the Owner, will not provide a suitable foundation or structural support for the pipe and is unsuitable for use in backfill.

3. On-Site Material: Any suitable material from on-site excavation. Supply additional material as required to completely backfill trenches. Unless specifically stated elsewhere, suitable material brought on Site for trench backfill shall not be considered for payment.

4. Material for embankments and general fills may contain pieces of excavated ledge having maximum dimension of 12 inches if approved by the Engineer.

5. Owner reserves the right to inspect off Site sources of materials and order tests of these materials to verify compliance with these Specifications. The Contractor shall provide the location of off Site sources and access to off Site sources whenever requested by Owner.

B. Granular Subbase: Consisting of inert material that is hard, durable stone and course sand, free from loam and clay, surface coatings, deleterious material and conforming to M.02.02.1 of the CTDOT Standard Specifications. Gradation requirements shall be determined by AASHTO-T11 and T27. Sieve analysis by weight:

Sieve Size	Percent Passing by Weight
1/2 inch	50-85
#4	40-75
#50	8-28
#200	0-10

Type a: maximum stone size = 6-inches in largest dimension
Type b: maximum stone size = 3-inches in largest dimension

C. Crushed Stone: Durable crushed rock consisting of the granular fragments obtained by breaking and crushed solid or shattered natural rock, and free from a detrimental

quantity of thin, flat, elongated, or other objectionable pieces. Shall be free from clay, loam or deleterious material and not more than 1.0% of satisfactory material passing a No. 200 sieve will be allowed to adhere to the crushed stone. Crushed stone shall be uniformly blended according to the grading requirements in the following table:

3/4" Crushed Stone	
Sieve Size	**Percent Finer By Weight**
1-Inch	100
¾-Inch	90-100
½-Inch	20-50
3/8-Inch	0-20
No. 4	0-5
No. 200	<1

D. Aggregate Base Course: Course aggregate shall be either gravel, broken stone or reclaimed miscellaneous aggregate containing no more than 2% by weight (mass) of asphalt cement, at the option of the Contractor. When tested by means of the Los Angeles Machine, using AASHTO Method T 96, the coarse aggregate shall not have a loss of more than 50%. The fine aggregate shall be natural sand, stone sand, screenings or any combination thereof. The fine aggregate shall be limited to material 95% of which passes a No. 4 (4.75-mm) sieve having square openings and not more than 8% of which passes a No. 200 (75-µm) sieve. The material shall be free from clay, loam and deleterious materials. Coarse and fine aggregates shall be in accordance with Section M.05.01 of the CTDOT Standard Specifications and shall be combined and mixed by approved methods so that the resulting material shall conform to the following gradation requirements:

Sieve Size	Percent Passing by Weight
2 1/2 inch	100
3/4 inch	50-75
1/4 inch	25-45
#100	2-12

E. Permeable Pavement Subbase: Crushed stone consisting of durable, clean angular rock fragments obtained by breaking and crushing rock:

Sieve Size	(Gradation AASHTO No. 57) Percent Passing by Weight
1 1/2-inch	100
1 inch	95-100
1/2 inch	25-60
No. 4	0-10
No. 8	0-5

F. Structural fill material's gradation, abrasion resistance, and soundness shall be in accordance with CT DOT M.02.06, except two gradations are acceptable for use of on-site stockpiled reclaimed, or excavated material:

Sieve Size	Gradation (from CONNDOT M.02.06) *Percent passing by weight*
	Type C- Modified
1 1/2-inch	100
3/4-inch	60-80*
1/4-inch	35-60*
No. 10	15-45
No. 40	5-25
No. 100	0-10
No. 200	0-5

G. Sand: Sand shall be free from ice and snow, roots, sod, rubbish and other deleterious or organic material. Sand fill shall be a well-graded, medium to coarse sand with a maximum diameter of 1/4 inch and no more than 10% passing the No. 200 sieve.

H. Rip-Rap: Rip-rap shall be durable crushed rock consisting of the fragments obtained by breaking and crushed solid or shattered natural rock, and free from a detrimental quantity of thin, flat, elongated, or other objectionable pieces. Shall be free from clay, loam or deleterious material and shall be provided at the sizes indicated on the contract drawings.

I. Loam Borrow: Topsoil shall be in accordance with Article M.13.01 of the CTDOT Standard Specifications and consist of fertile, friable, natural loam similar in nature to topsoil in Project location, without admixture of subsoil, refuse or other foreign materials and shall be obtained from a well-drained arable Site. The loam shall be a mixture of sand, silt and clay particles. The mixture shall contain approximately equal portion of each material so as to exhibit sandy and clayey properties. The loam shall be reasonably free of stumps, roots, heavy or stiff clay, stones larger than 1-inch in diameter, lumps, coarse sand, noxious weeds, stick brush, trash, debris or other objectionable materials. The loam shall be reasonably well draining, shall not contain toxic amounts of either acid or alkaline elements and shall contain not less than 5% nor more than 20% organic matter as determined by the loss on ignition of

oven-dried samples. Test samples shall be oven-dried to a constant weight at a temperature of 221°F.

J. Refill Material: Use crushed stone for refilling excavation below grade or rock excavation unless otherwise directed by the Engineer.

PART 3 – EXECUTION

3.01 EXCAVATION

A. Remove materials encountered to the limits shown on the Drawings or designated in the Specifications.

B. Earth excavation: removal and disposal of pavements, curbing and other obstructions visible on ground surface, underground structures and utilities indicated to be demolished and removed, and other materials encountered that are not classified as rock excavation or unauthorized excavation. Legally dispose of surplus and unsuitable (except contaminated or polluted soil) materials resulting from excavation and not needed for use on the Project, as determined by the Engineer. Obtain necessary permits for legal disposal of surplus material.

C. Excavation to Remove and Dispose of Unsuitable Material: When excavation has reached required subgrade elevations, notify Owner who will make an inspection of conditions. If unsuitable materials are encountered at required subgrade elevations, carry excavations deeper as directed by Owner and replace excavated material with gravel or crushed stone, compacted in maximum 6-inch lift depths. Removal and disposal of unsuitable materials for unauthorized excavations and replacement of said material with gravel or crushed stone shall not be considered for payment.

D. Excavation for Structures: Conform to elevations and dimensions shown within a tolerance of plus or minus 0.10 feet, and extending a sufficient distance from footings and foundations to permit placing and removal of concrete formwork, installation of services, other construction, and for inspection.

1. In excavating for footings and foundations, take care not to disturb bottom of excavation. Excavate by hand to final grade just before concrete reinforcement is placed. Trim bottoms to required lines and grades to leave solid base to receive other Work.

E. Pipe trenches: as shown on Drawings or as required for installation of pipe and bedding material.

F. Excavation in Paved Areas: saw cut, grind, or reclaim existing pavement, as permitted by Owner, prior to excavation to the limits shown on the Drawings. Provide a clean, uniform edge and minimize disturbance of remaining pavement. Cut and removed the minimum amount of pavement required to perform the Work.

G. Excavation for Trenches: excavate to the minimum width required for installation of the pipe, structure or shoring system.

1. Provide shoring and bracing required to protect worker, support walls of excavation and prevent undermining of adjacent pavement surfaces.

2. Produce an evenly graded, flat trench bottom at the subgrade elevation required for installation of pipe or structure and bedding material.

3. Load excavated material directly into trucks unless otherwise permitted by the Owner.

4. Place suitable backfill material directly into trench or excavation. Do not stockpile material to be used as backfill in roadways.

H. Unauthorized excavation: removal of materials beyond indicated subgrade elevations or dimensions without specific direction of Engineer. Unauthorized excavation, as well as remedial work directed by Engineer including refilling, is at no additional cost to Owner.

J. Refilling Unauthorized Excavation

1. Trenches: crushed stone or gravel, as specified or directed by Owner.

2. Elsewhere: backfill and compact unauthorized excavations as specified for authorized excavations of same classification, unless otherwise directed by Engineer.

I. Material Storage: Stockpile and maintain suitable surplus excavated materials for re-use as backfill anywhere within the project limits as approved by the Owner. Place, grade, and shape stockpiles for proper drainage. Provide erosion controls as required by the local Conservation Commission to prevent erosion of stockpiles from entering adjacent drainage systems or waterways. Locate and retain soil materials away from edge of excavations.

3.02 ROCK REMOVAL

A. General

1. Notify Engineer immediately of change in classification. Should bedrock be encountered above the trench bottom grade or above the subgrade elevation, expose the bedrock surface to allow the Engineer to perform the necessary elevation survey and take cross-sectional measurements.

2. Perform Rock Excavation by mechanical methods.

3. Boulders: Remove or partially remove boulders exposed on the sides of or in the bottom of excavations as directed by the Engineer. Remove boulders

to not less than 2 feet outside structure walls, not less than 12 inches outside footings, not less than 6 inches below underslab subgrade, not less than the lateral trench width payment lines indicated, and not less than 12 inches below the underside of pipes. Depressions resulting from the removal of boulders and rock shall be refilled with approved compacted bedding. Bedding for refilling will not be paid for separately.

4. Refill unauthorized rock excavations, or excavations made beyond or below the indicated or directed excavation pay limits, with compacted bedding at no additional cost.

5. Remove and dispose of unused rock and boulders off-site.

6. Remove, transport and dispose of all residual solids encountered to the limits shown on the Drawings, or designated in the Specifications, or as needed to complete the project, in a method approved by Local, State and Federal regulatory agencies.

3.03 STABILITY OF EXCAVATIONS

A. Slope sides of excavations and temporary support shall comply with OSHA Regulations and local Codes. Shore and brace where sloping is not possible due to space restrictions or stability of material excavated.

B. Maintain sides and slopes of excavations in safe condition until completion of backfilling.

3.04 SHORING AND BRACING

A. Provide in accordance with Division 01 General Requirements.

B. General

1. Provide temporary sheeting, shoring, and bracing in locations where required to protect excavated areas as required for safety or compliance with OSHA and Laws and Regulations per Section 00 73 19, at no additional cost to the Owner. If the Engineer is of the opinion that at any point sufficient or proper supports have not been provided, additional supports may be ordered to be placed at no additional cost to the Owner. Compliance with such order shall not relieve the Contractor from responsibility for the sufficiency of such supports.

2. In no case should slope height, slope inclination, or excavation depth, including utility trench excavation depth, exceed those specified in Laws and Regulations per Section 00 73 19. As a minimum, follow the current OSHA Health and Safety Standards for Excavations, 29 CFR Part 1926.

3. Provide system to resist earth and hydrostatic pressures, including surcharges from surface loads.

4. Maintain shoring and bracing while excavation is open.

5. If not leaving in place, remove systems in stages to prevent disturbance of soils and damage to structures and improvements. Fill voids as soon as sheeting is withdrawn.

C. Provide shoring and bracing designed by a Connecticut Registered Professional Engineer to protect existing buildings, utilities, and other improvements and excavation against movement due to caving and to meet safety requirements of OSHA and Laws and Regulations per Section 00 73 19 for shoring and bracing.

1. Wood Sheeting and Bracing: used as needed to make excavation safe and secure. Leave wood sheeting in place.

2. Steel Sheet Piling: to be removed following completion of Work or remain in place when directed by the Engineer. Drive sheet piling prior to excavation where possible. Fill and compact voids outside sheeting to hold sides of excavation in place. Steel sheet piling may be left in place at the Contractor's option if approved by the Engineer and at no additional cost to the Owner. Cut off sheet piling to be left in place at least 5 feet below finish grade or less if directed by the Engineer.

3. Movable box: used where a shoring system is required but steel piling is not suitable as determined by Contractor.

D. Field Quality Control

1. Provide in accordance with Division 01 General Requirements.

3.05 DEWATERING

A. Provide in accordance with Division 01 General Requirements.

B. Do not allow water to accumulate in excavations. Provide and maintain pumps and dewatering system components necessary to convey water away from excavations. Convey water removed from excavations and rain water to collecting or run-off areas. Establish and maintain temporary drainage ditches and other diversions outside excavation limits for each structure.

C. Do not use trench excavations as temporary drainage ditches. In cases where trench excavation requires dewatering during construction, a temporary containment basin will be constructed utilizing haybales and filter fabric materials. Haybales will be stacked to sufficient height to contain volume of water to be dewatered with filter fabric barrier along outside edge of haybales to prevent channeling of flows. Water will drain in controlled fashion from haybale structure trapping sediment within the

containment. Any remaining sediment trapped inside the containment basin will be collected and disposed.

3.06 BACKFILL AND FILL

A. Do not backfill excavations and trenches until new utilities have been inspected and, if required, tested satisfactorily for conformance with the Drawings and Specifications unless directed otherwise by the Owner.

B. Placement

1. Place acceptable soil material in layers to required elevations as shown on the Drawings and as listed below. Fill, backfill, and compact to produce minimum subsequent settlement of the material and provide adequate support for the surface treatment or structure to be placed on the material. Place material in approximately horizontal layers beginning at lowest area to be filled. Do not impair drainage. Replace fill that becomes frozen or saturated in stockpiles with suitable off-Site fill at no additional cost to Owner.

2. Place backfill and fill materials in layers not more than 12 inches in loose depth for material compacted by heavy compaction equipment (vibratory roller compactor, backhoe with vibratory tamper, etc.) and not more than 6 inches in loose depth for material compacted by hand-operated tampers. Do not place backfill or fill material on surfaces that are muddy, frozen, or contain frost or ice. Adjust methods as necessary to achieve specified compaction requirements.

3. Place backfill and fill materials evenly adjacent to structures, to required elevations. Take care to prevent wedging action of backfill against structures by carrying material uniformly around structure to approximately same elevation in each lift.

4. Do not allow heavy machinery within 5 feet of structure during backfilling and compacting.

C. Backfilling Excavations

1. Backfill excavations promptly as Work permits, but not until completion of the following.

a. Acceptance of construction below finish grade including, dampproofing, waterproofing, and perimeter insulation

b. Inspection and recording locations of underground utilities

c. Removal of concrete formwork

d. Removal of shoring and bracing, and backfilling of voids with satisfactory materials. Cut off temporary sheet piling driven below

bottom of structures and remove in manner to prevent settlement of the structure or utilities, or leave in place if required

e. Removal of trash and debris

2. Backfill cast-in-place concrete structures when the concrete has developed adequate strength.

3. Use care in backfilling to avoid damage or displacement of underground structures and pipe.

4. Backfill under existing utility pipes crossed by new utility pipes with sand, unless otherwise noted, and extend continuously from the bedding of the new pipe to the utility pipe crossed, including a 6 inch thick envelope of sand, unless otherwise noted, all around the existing utility pipes.

5. "Haunching" or "forming" with common fill will not be allowed.

D. Backfilling Trenches

1. See Trench Detail on the Drawings.

2. Bed pipe in a 12-inch envelope of crushed stone, unless otherwise noted. Limits of bedding and requirements for remaining trench backfill are shown on the Drawings.

3. Trenches in cross-country runs: Restore surface to that existing prior to construction. Mound trench 6-inches above existing grade if required by the Engineer.

E. Remove and Dispose of Unsuitable Material

1. Replace unsuitable material with suitable on-Site material. Use Select Backfill if additional material is required.

3.07 COMPACTION

A. Use methods which produce the required degree of compaction throughout the entire depth of material placed without damage to new or existing facilities and which are approved by the Engineer. Adjust moisture content of soil as required. Remove and replace material which is too wet to compact to required density. Compact each layer as Work progresses.

B. Degree of Compaction (minimum densities)

Fill and Backfill Location	Density
Under structure foundations	95%
Under building slab	95%
Top 2 feet under pavement grade	95%
Below top 2 feet under pavement grade	95%

Trenches through unpaved areas	95%
Embankments	95%
Pipe Bedding	95%
Beside structure foundation walls, tank walls, and retaining walls	95%
Under pipes through structural fills	95%
Maximum density:	ASTM D1557, modified

C. Testing

1. Determine actual in place densities using nuclear density compaction tests, (ASTM D6938) as directed by the Owner and in accordance with Division 01 General Requirements.

2. Perform additional Work to obtain proper compaction if in-place densities do not meet the specified densities. Additional compensation will not be made for Work required to meet the specified densities.

D. Minimum Number of Tests: Minimum number of compaction tests performed shall be in accordance with local requirements and as stated below. Where conflict exists between local requirements and requirements herein, the more stringent requirement shall apply.

1. Suitable Backfill: Compact backfill in maximum loose lifts per table above. For each lift make one field density test every 50 linear feet.

2. Pavement Sub base: Make at least one field density test of sub base for every 50 linear feet of paved area.

3.08 GRADING

A. Uniformly grade areas within limits of grading under this section, including adjacent transition areas. Smooth finished surface within specified tolerances, compact with uniform levels or slopes between points where elevations are shown, or between such points and existing grades.

B. Grade areas adjacent to structure lines to drain away from structures and to prevent ponding.

C. Finish surfaces: free from irregular surface changes, and as follows.

1. Lawn or Other Unpaved Areas: Finish areas to receive topsoil to within not more than 0.10’ above or below required subgrade elevations.

2. Pavements: Shape surface of areas under pavement to line, grade and cross-section, with finish surface not more than 1/2 inch above or below required subgrade elevation.

3. Fill Under Slabs: Grade smooth and even, free of voids, compacted as specified, and to required elevation. Provide final grades within a tolerance of 1/2 inch when tested with a 10-foot straightedge.

D. Compaction: After grading, compact subgrade surfaces to the percentage of maximum density for each area classification.

3.09 MAINTENANCE

A. Protection of Graded Areas: Protect newly graded areas from traffic and erosion. Keep free of trash and debris.

B. Repair and re-establish grades in settled, eroded, and rutted areas to specified tolerances.

C. Where completed compacted areas are disturbed by subsequent construction operations or adverse weather, scarify surface, re-shape, and compact to required density prior to further construction.

3.10 DISPOSAL OF EXCESS MATERIALS

A. Removal from Owner's Property: Upon completion of Work, remove excess excavated material, surplus loam and reclaimed pavement and dispose of it off Owner's property. Restore Site to existing or like new condition, as directed by Owner.

B. Material shall be legally disposed of in accordance with all State and local requirements.

C. Provide erosion control measures in accordance with Laws and Regulations and in accordance with Division 01 General Requirements. Keep roads free of debris. Use suitable watertight vehicles for hauling wet materials over roads and streets. Clean up materials dropped from or spread by vehicles promptly.

3.11 CONTAMINATED SOIL MATERIAL

A. The Contractor shall contact the Town and Engineer immediately upon encountering any soil material that looks or smells like it may be contaminated or polluted. Such material shall be segregated and stockpiled at the Site, or as otherwise directed by the Town or Engineer. The extent of removal of potentially contaminated or polluted soil shall be determined by the Town or Engineer.

B. The Town will be responsible for characterization and disposal of any contaminated or hazardous material encountered within the limit of work at the Site during earthwork operations. The Town may exercise the option to request that the Contractor identify the disposal facility, prepare the disposal documentation, including but not limited to manifests, properly handle, load, transport, dispose, and manage and submit post-disposal documentation for the material as Extra Work.

END OF SECTION

This page intentionally left blank.

SECTION 32 12 00

FLEXIBLE PAVING

PART 1 – GENERAL

1.01 SUMMARY

A. Section Includes

1. This work shall cover the composition, mixing, construction upon the prepared subgrade, and the protection of hot asphalt concrete pavement, Pavement Sealing and pervious paving in accordance with this Section and applicable reference standards listed in Article 1.03. The hot asphalt concrete pavement shall consist of an aggregate or asphalt base course and asphalt surface course constructed in conformity with the lines, grades, thickness, and cross sections as shown. Each course shall be constructed to the depth, section, or elevation required by the drawings and shall be rolled, finished, and approved before the placement of the next course. The pervious pavement bed shall consist of a pervious surface course underlain by a stone bed of uniformly graded and clean-washed coarse aggregate with a void space of at least 40%. The pervious pavement may consist of pervious asphalt.

2. Provide pavement markings as specified and as directed by the Engineer.

1.02 PRICE AND PAYMENT PROCEDURES

A. Measurement and payment requirements: per Division 01 General Requirements.

1.03 REFERENCES

A. Reference Standards

1. AASHTO M320-Standard Specification for PGAB

2. "Standard Specifications for Roads, Bridges, and Incidental Construction," current revision, Connecticut Department of Transportation

3. "Design, Construction, and Maintenance Guide for Porous Asphalt Pavements, Information Series" National Asphalt Paving Association (NAPA)

1.04 ADMINISTRATIVE REQUIREMENTS

A. Coordination, Sequencing, and Scheduling: per Division 01 General Requirements.

1.05 SUBMITTALS

A. Submit in accordance with Division 01 General Requirements.

B. Material Certificates: Certificates signed by material producer and Contractor stating that each material complies with specified requirements

C. Mix Design: Provide mix design for each grade of pavement to be used at least 20 days prior to start of paving

D. Certified Weigh Slips: If required by the Owner, provide for each truck load of bituminous material.

E. Closeout and Maintenance Material Submittals: per Division 01 General requirements.

F. Permeable Pavement: The mixing plant Quality Control Technician shall perform testing in accordance with the following methods and minimum frequencies.

TEST	MINIMUM FREQUENCY	TEST
Temperature in Truck at Plant	6 times per day	
Gradation	Greater of either (a) 1 per 500 tons, (b) 2 per day, or (c) 3 per job	AASHTO T30
Binder Content	Greater of either (a) 1 per 500 tons, (b) 2 per day, or (c) 3 per job	AASHTO T164
Air Void Content	Greater of either (a) 1 per 500 tons, (b) 2 per day, or (c) 3 per job	ASTM D6752
Binder Draindown	Greater of either (a) 1 per 500 tons, (b) 1 per day, or (c) 1 per job	ASTM D6390

If an analyzed sample is outside the testing tolerances, immediate corrective action shall be taken. After the corrective action has been taken, the resulting mix shall be sampled and tested. If the re-sampled mix test values are outside the tolerances, the Engineer will be immediately informed. The Engineer may cease production. The Contractor is responsible for all mix produced for the project.

1.06 QUALITY ASSURANCE

A. Provide in accordance with Division 01 General Requirements.

B. Comply with any road opening permits issued for the Work

C. The Contractor shall establish and control the pavement (aggregate or asphalt base course and asphalt surface course) alignments, grades, elevations, and cross sections as shown on the Drawings.

1.07 DELIVERY, STORAGE, AND HANDLING

A. Provide in accordance with Division 01 General Requirements.

1.08 SITE CONDITIONS

A. Existing Conditions: per Division 01 General Requirements.

1.09 MAINTENANCE

A. Extra Materials: Furnish as specified below. Make interchangeable with and same material and workmanship as corresponding original parts.

PART 2 – PRODUCTS

2.01 AGGREGATE BASE AND SUBBASE

A. Per Earthwork: Section 31 00 00

2.01 BITUMINOUS PAVEMENT

A. Comply with materials requirements, CTDOT Standard Specification Section M.04

2.01 BITUMINOUS TACK COAT

A. Comply with materials requirements, CTDOT Standard Specification

2.02 PERMEABLE PAVEMENT

A. Permeable pavement shall be provided as depicted on the contract drawings and as specified below.

Sieve Size (inch/mm)	Percent Passing (%)
0.75/19	**100**
0.50/12.5	**85-100**
0.375/9.5	**55-75**
No. 4/4.75	**10-25**

Sieve Size (inch/mm)	Percent Passing (%)
No. 8/2.36	**5-10**
No. 200/0.075 (#200)	**2-4**
Binder Content (AASHTO T164)	**6-6.5%**
Fiber Content by Total Mixture Mass	**0.3% cellulose or 0.4% mineral**
Rubber Solids (SBR) Content by Weight of the Bitumen	**1.5-3% or TBD**
Air Void Content (ASTM D6752/AASHTO T275)	**16.0-22.0%**
Draindown (ASTM D6390)*	**≤ 0.3%**
Retained Tensile Strength (AASHTO 283)**	**≥ 80%**
Cantabro abrasion test on unaged samples (ASTM D7064-04)	**≤ 20%**
Cantabro abrasion test on 7 day aged samples	**≤ 30%**

*Cellulose or mineral fibers may be used to reduce draindown.

**If the TSR (retained tensile strength) values fall below 80% when tested per NAPA IS 131 (with a single freeze thaw cycle rather than 5), then in Step 4, the contractor shall employ an antistrip additive, such as hydrated lime (ASTM C977) or a fatty amine, to raise the TSR value above 80%.

2.03 MARKING PAINT

A. General: Alkyd-resin type, ready-mixed complying with AASHTO M 248, Type I.

B. Color: White for shoulder striping, bicycle lane demarcation, and directional arrows; blue for handicapped parking symbols; yellow for other lane demarcation striping.

2.04 SOURCE QUALITY CONTROL

A. Provide in accordance with Division 01 General Requirements.

PART 3 – EXECUTION

3.01 PREPARATION

A. Do not begin paving operations until base and sub base have been accepted by Engineer.

B. Apply bituminous prime and tack coats only when the ambient temperature in the shade is at least 50 degrees F for 12 hours immediately prior to application. Do not apply when the base surface is wet or contains an excess of moisture which would prevent uniform distribution and the required penetration.

3.02 BITUMINOUS PAVEMENTS

A. Comply with installation requirements, CTDOT Standard Specification

B. Saw cuts and butt joints shall be used in existing pavement as indicated on the Drawings to facilitate the installation of new pavement.

3.03 PERMEABLE PAVEMENT

A. Placing Equipment:

1. The paver shall be a self-propelled unit with an activated screed or strike-off assembly, capable of being heated if necessary, and capable of spreading and finishing the mixture without segregation for the widths and thicknesses required. In general, track pavers have proved superior for Permeable Asphalt placement. The screed shall be adjustable to provide the desired cross-sectional shape. The finished surface shall be of uniform texture and evenness and shall not show any indication of tearing, shoving, or pulling of the mixture. The machine shall, at all times, be in good mechanical condition and shall be operated by competent personnel.

2. Pavers shall be equipped with the necessary attachments, designed to operate electronically, for controlling the grade of the finished surface.

3. The adjustments and attachments of the paver will be checked and approved by the Engineer before placement of asphalt material.

4. Pavers shall be equipped with a sloped plate to produce a tapered edge at longitudinal joints. The sloped plate shall be attached to the paver screed extension.

5. The sloped plate shall produce a tapered edge having a face slope of 1:3 (vertical: horizontal). The plate shall be so constructed as to accommodate compacted mat thickness from 35 to 100 mm (1 1/4 to 4 inches). The bottom of the sloped plate shall be mounted 10 to 15 mm (3/8 to 1/2 inch)

above the existing pavement. The plate shall be interchangeable on either side of the screed.

6. Pavers shall also be equipped with a joint heater capable of heating the longitudinal edge of the previously placed mat to a surface temperature of 95 °C (200 °F), or higher if necessary, to achieve bonding of the newly placed mat with the previously placed mat. This shall be done without undue breaking or fracturing of aggregate at the interface. The surface temperature shall be measured immediately behind the joint heater. The joint heater shall be equipped with automated controls that shut off the burners when the pavement machine stops and reignite them with the forward movement of the paver. The joint heater shall heat the entire area of the previously placed wedge to the required temperature. Heating shall immediately precede placement of the asphalt material.

B. Rollers

1. Rollers shall be in good mechanical condition, operated by competent personnel, capable of reversing without backlash, and operated at speeds slow enough to avoid displacement of the asphalt mixture. The mass (weight) of the rollers shall be sufficient to compact the mixture to the required density without crushing of the aggregate. Rollers shall be equipped with tanks and sprinkling bars for wetting the rolls.

2. Rollers shall be two-axle tandem rollers with a gross mass (weight) of not less than 7 metric tons (8 tons) and not more than 10 metric tons (12 tons) and shall be capable of providing a minimum compactive effort of 44 kN/m (250 pounds per inch) of width of the drive roll. All rolls shall be at least 1 m (42 inches) in diameter.

3. A rubber tired roller will not be required on the open graded asphalt friction course surface.

C. The temperature of the asphalt mixture, at the time of discharge from the haul vehicle and at the paver, shall be between 135-163°C (275 to 325°F), within 6 °C (10 °F) of the compaction temperature for the approved mix design.

D. Spreading and Finishing

1. The Permeable Asphalt shall be placed either in a single application at 4 inches (10 cm) thick or in two lifts. If more than one lift is used, great care must be taken to insure that the permeable asphalt layer join completely. This means: keeping the time between layer placements minimal; keeping the first layer clear from dust and moisture, and minimizing traffic on the first layer.

2. The Contractor shall protect all exposed surfaces that are not to be treated from damage during all phases of the pavement operation.

3. The asphalt mixture shall be spread and finished with the specified equipment. The mixture shall be struck off in a uniform layer to the full width required and of such depth that each course, when compacted, has the required thickness and conforms to the grade and elevation specified. Pavers shall be used to distribute the mixture over the entire width or over such partial width as practical. On areas where irregularities or unavoidable obstacles make the use of mechanical spreading and finishing equipment impractical, the mixture shall be spread and raked by hand tools.

4. No material shall be produced so late in the day as to prohibit the completion of spreading and compaction of the mixture during daylight hours, unless night paving has been approved for the project.

5. No traffic will be permitted on material placed until the material has been thoroughly compacted and has been permitted to cool to below 38 °C (100 °F). The use of water to cool the pavement is not permitted. The Engineer reserves the right to require that all work adjacent to the pavement, such as guardrail, cleanup, and turf establishment, is completed prior to placing the wearing course when this work could cause damage to the pavement. On projects where traffic is to be maintained, the Contractor shall schedule daily pavement operations so that at the end of each working day all travel lanes of the roadway on which work is being performed are paved to the same limits. Suitable aprons to transition approaches, where required, shall be placed at side road intersections and driveways as directed by the Engineer.

E. Compaction

1. Immediately after the asphalt mixture has been spread, struck off, and surface irregularities adjusted, it shall be thoroughly and uniformly compacted by rolling. The compaction objective is 16% - 19% in place void content (Corelock).

2. Breakdown rolling shall occur when the mix temperature is between 135-163°C (275 to 325°F).

3. Intermediate rolling shall occur when the mix temperature is between 93-135°C (200 to 275°F).

4. Finish rolling shall occur when the mix temperature is between 66-93°C (150 to 200°F).

5. The cessation temperature occurs at approximately 79°C (175°F), at which point the mix becomes resistant to compaction. If compaction has not been done at temperatures greater than the cessation temperature, the pavement will not achieve adequate durability.

6. The surface shall be rolled when the mixture is in the proper condition and when the rolling does not cause undue displacement, cracking, or shoving.

7. Rollers or oscillating vibratory rollers, ranging from 8-12 tons, shall be used for compaction. The number, mass (weight), and type of rollers furnished shall be sufficient to obtain the required compaction while the mixture is in a workable condition. Generally, one breakdown roller will be needed for each paver used in the spreading operation.

8. To prevent adhesion of the mixture to the rolls, rolls shall be kept moist with water or water mixed with very small quantities of detergent or other approved material. Excess liquid will not be permitted.

9. Along forms, curbs, headers, walls, and other places not accessible to the rollers, the mixture shall be thoroughly compacted with hot or lightly oiled hand tampers, smoothing irons or with mechanical tampers. On depressed areas, either a trench roller or cleated compression strips may be used under the roller to transmit compression to the depressed area.

10. Other combinations of rollers and/or methods of compacting may be used if approved in writing by the Engineer, provided the compaction requirements are met.

11. Unless otherwise specified, the longitudinal joints shall be rolled first. Next, the Contractor shall begin rolling at the low side of the pavement and shall proceed towards the center or high side with lapped rollings parallel to the centerline. The speed of the roller shall be slow and uniform to avoid displacement of the mixture, and the roller should be kept in as continuous operation as practical. Rolling shall continue until all roller marks and ridges have been eliminated.

12. Rollers will not be stopped or parked on the freshly placed mat.

13. It shall be the responsibility of the Contractor to conduct whatever process control the Contractor deems necessary. Acceptance testing will be conducted by the Engineer using cores provided by the Contractor.

14. Any mixture that becomes loose and broken, mixed with dirt, or is in any way defective shall be removed and replaced with fresh hot mixture. The mixture shall be compacted to conform to the surrounding area. Any area showing an excess or deficiency of binder shall be removed and replaced. These replacements shall be at the Contractor's expense.

15. If the Engineer determines that unsatisfactory compaction or surface distortion is being obtained or damage to highway components and/or adjacent property is occurring using vibratory compaction equipment, the Contractor shall immediately cease using this equipment and proceed with the work in accordance with the fifth paragraph of this subsection.

16. The Contractor assumes full responsibility for the cost of repairing all damages that may occur to roadway or parking lot components and adjacent property if vibratory compaction equipment is used. After final rolling, no vehicular traffic of any kind shall be permitted on the surface until cooling and hardening has taken place, and in no case within the first 48 hours. For small batch jobs, curing can be considered to have occurred after the surface temperature is less than 100 ºF (38 ºC). Curing time is preferably one week, or until the entire surface temperature cools below 100 ºF (38 ºC). Provide barriers as necessary at no extra cost to the Owner to prevent vehicular use; remove at the discretion of the Engineer.

F. Tolerance

1. The surface will be tested by the Engineer using a straightedge at least 4.9 m (16 feet) in length at selected locations parallel with the centerline. Any variations exceeding 3 mm (1/8 inch) between any two contact points shall be satisfactorily eliminated. A straightedge at least 3 m (10 feet) in length may be used on a vertical curve. The straightedges shall be provided by the Contractor.

2. Work shall be done expertly throughout, without staining or injury to other work. Transition to adjacent impervious asphalt pavement shall be merged neatly with flush, clean line. Finished pavement shall be even, without pockets, and graded to elevations shown on drawing.

3. Permeable pavement beds shall not be used for equipment or materials storage during construction, and under no circumstances shall vehicles be allowed to deposit soil on paved permeable surfaces.

3.04 TRENCH PATCHING

A. Do not leave more than 1000 linear feet of backfilled trench unpaved at any one time. Place aggregate base and sub base as shown on the Drawings.

B. Permanent Patching

1. Remove all existing pavement and re-grade base material and compact as required.

2. Base and surface courses shall meet existing conditions.

3.05 TRAFFIC AND PARKING LOT MARKINGS

A. Sweep and clean surface to eliminate loose material and dust

B. Apply paint with mechanical equipment to produce uniform straight edges. Apply at manufacturer's recommended rates to provide minimum 12 to 15 mils dry thickness.

3.06 PROTECTION

A. Protect the asphaltic concrete paved areas from traffic until the bituminous asphalt is set and cured and does not pick up under foot or wheeled traffic.

3.07 FINAL CLEANUP

A. Remove all debris, rubbish, and excess material from the work area.

3.08 FIELD QUALITY CONTROL

A. Provide in accordance with Division 01 General Requirements.

3.09 STARTUP & COMMISSIONING

A. Provide in accordance with Division 01 General Requirements.

3.10 CLOSEOUT ACTIVITIES

A. Provide in accordance with Division 01 General Requirements.

END OF SECTION

SECTION 32 16 13

CURBS AND GUTTERS

PART 1 – GENERAL

1.01 SUMMARY

A. Section Includes

1. Provide curbs and gutters in accordance with this Section and applicable reference standards listed in Article 1.03.

1.02 PRICE AND PAYMENT PROCEDURES

A. Measurement and payment requirements: per Division 01 General Requirements.

1.03 REFERENCES

A. References Standards

1. "Standard Specifications for Roads, Bridges and Incidental Construction," 2004, State of Connecticut Department of Transportation (ConnDOT).

2. American Society for Testing and Materials (ASTM) C 615-68 Structural Granite.

3. American Society for Testing and Materials (ASTM) D1751 Asphalt Saturated Fiberboard

1.04 ADMINISTRATIVE REQUIREMENTS

A. Coordination, Sequencing, and Scheduling: per Division 01 General Requirements.

1.05 SUBMITTALS

A. Submit in accordance with Division 01 General Requirements.

B. Shop Drawings

1. Dimensions of cut curbing

2. Manufacturers construction data for granite curbs

3. Manufacturers printed data on recommended installation procedures for granite curb

4. Manufacturers printed data on recommended installation procedures for slipform concrete curbing

C. Certificates: Manufacturer's certification that products meet Specification requirements

D. Design mix: Provide mix design for 4,000 psi concrete to be used for slipform curbing at least 20 days prior to start of placement

E. Closeout and Maintenance Material Submittals: per Division 01 General Requirements.

1.06 QUALITY ASSURANCE

A. Provide in accordance with Division 01 General Requirements.

1.07 DELIVERY, STORAGE AND HANDLING

A. Provide in accordance with Division 01 General Requirements.

1.08 SITE CONDITIONS

A. Existing Conditions: per Division 01 General Requirements.

PART 2 – PRODUCTS

2.01 PART 2 – PRODUCTS

A. Granite curb: Comply with material requirements of CTDOT Standard Specification

B. Precast concrete curb: Comply with material requirements of CTDOT Standard Specification

C. Cast in place curb: Comply with material requirements of CTDOT Standard Specifications

2.02 JOINT PAD

A. Bituminous fiber joint filler: Preformed strips of composition below, complying with ASTM D1751 Asphalt Saturated Fiberboard

2.03 SOURCE QUALITY CONTROL

A. Provide in accordance with Division 01 General Requirements.

PART 3 – EXECUTION

3.01 INSPECTION

A. Verify that earthwork is completed to correct line and grade.

B. Check that subgrade is smooth, compacted, and free of frost or excessive moisture.

C. Do not commence Work until conditions are satisfactory.

3.02 INSTALLATION

A. Granite curb: Comply with material requirements of CTDOT Standard Specification.

B. Precast concrete curb: Comply with material requirements of CTDOT Standard Specification.

3.03 BACKFILLING

A. Granite curb: Comply with material requirements of CTDOT Standard Specification.

B. Precast concrete curb: Comply with material requirements of CTDOT Standard Specification.

3.04 FIELD QUALITY CONTROL

A. Provide in accordance with Division 01 General Requirements.

3.05 STARTUP & COMMISSIONING

A. Provide in accordance with Division 01 General Requirements.

3.06 CLOSEOUT ACTIVITIES

A. Provide in accordance with Division 01 General Requirements.

END OF SECTION

SECTION 32 90 00

PLANTING

PART 1 – GENERAL

1.01 SUMMARY

A. Section Includes

1. Provide landscaping in accordance with this Section and applicable sections of standards listed in Article 1.03.

   a. Preparation of subgrade to receive topsoil

   b. Spreading topsoil

   c. Seeding

   d. Planting Shrubs

B. Related Requirements

1. Section 024114 Selective Demolition for Earthwork

2. Section 310000 Earthwork

1.02 PRICE AND PAYMENT PROCEDURES

A. Measurement and payment requirements: per Division 01 General Requirements.

1.03 REFERENCES

A. Reference Standards

1. AOAC International

2. Association of Official Seed Analysts, Inc. (AOSA, Inc.)

1.04 ADMINISTRATIVE REQUIREMENTS

A. Coordination, Sequencing, and Scheduling: in accordance with Division 01 General Requirements.

1.05 SUBMITTALS

A. Submit in accordance with Division 01 General Requirements.

B. Samples and Mockups: as specified in Article 1.06.

C. Sample Test Reports and Evaluations

1. Certified analyses

D. Source and Field Quality Control Submittals

1. Suppliers' certified analysis for standard products analysis by recognized laboratory made in accordance with methods established by AOAC International for non-standard products

2. Suppliers' certified analysis for soil amendments and fertilizer materials

3. Seed Suppliers' certified statement for each grass seed mixture required, stating: botanical and common name; percentage by weight; percentages of purity germination; and weed seed for each grass seed species

4. Proposed planting schedule, indicating dates for each type of landscape work during typical seasons for such Work in area of Site. Correlate with specified maintenance periods to provide maintenance from date of substantial completion until final completion, or a minimum of 60 days, whichever is longer.

E. Closeout and Maintenance Material Submittals: per Division 01 General Requirements.

1.06 QUALITY ASSURANCE

A. Provide in accordance with Division 01 General Requirements.

1. Samples

a. Topsoil material from the on-site stockpile

b. Topsoil material from off-site sources

1.07 DELIVERY, STORAGE, AND HANDLING

A. Provide in accordance with Division 01 General Requirements.

B. The landscape designer will specify, locate, and purchase plants. The Contractor may be requested to assist with plant delivery.

C. Packing, Shipping, Handling, and Unloading

1. Deliver grass seed in original containers identifying analysis of seed mixture, percentage of pure seed, year of production, net weight, and date and location of packaging. Do not deliver damaged packages.

2. Deliver fertilizer in waterproof bags identifying weight, chemical analysis, and name of manufacturer.

3. Package certified analyses specified in 1.04.D with products.

1.08 SITE CONDITIONS

A. Existing Conditions: per Division 01 General Requirements.

PART 2 – PRODUCTS

The landscape designer will specify, locate, and purchase plants.

2.01 SOURCE QUALITY CONTROL

A. Provide in accordance with Division 01 General Requirements.

PART 3 – EXECUTION

3.01 EXAMINATION

A. Verification of Conditions

1. Beginning Work means acceptance of existing conditions.

3.02 PREPARATION

A. The contractor shall furnish all supervision, labor, materials and equipment necessary to accomplish the services described herein.

B. Contractor will prepare the site for a variety of plant materials. Preparation will include, but is not limited to, the following:

1. Leveling existing soil post-construction, removal of construction debris, contaminated soil and rocks, appropriate disposal of debris.

2. Spreading and leveling purchased topsoil, compost, and amendments that may be added per soil test specifications. If topsoil or compost are purchased, every effort will be made to purchase weed-free material.

3. Reduction of weeds in native or purchased soil. A weed removal phase will be allocated for this purpose. Mechanical weed reduction is preferred, which includes top-stripping or shallow raking of the topsoil to remove germinated weed seedlings prior to installation of the design.

4. In the case where herbicides are deemed necessary after consultation with Town staff, the Contractor must have the appropriate pesticide applicator qualifications. Organic herbicides are preferred where possible.

5. Fine grade areas to smooth, even surface with loose, uniformly fine texture. Roll, rake and remove ridges, and fill depressions as required to meet finish grades. Limit fine grading to areas to be planted immediately after grading. Assure positive drainage away from buildings and structures.

6. Moisten prepared areas before planting if soil is dry. Water thoroughly and allow surface moisture to dry before planting lawns. Do not create a muddy soil condition.

7. Restore grassed areas to specified condition if eroded or otherwise disturbed after fine grading and prior to planting.

3.03 APPLICATION

A. The Contractor will work with the landscape designer to interpret and implement the Town-approved planting design. Contractor's planting expertise should include trees, shrubs, and landscape plugs.

B. Planting instructions will be provided by the landscape designer, based on current best practices. Best practices are determined by reference to standards published by authorities such as the International Society of Arborists, the Connecticut Urban Forest Council, the Connecticut Agricultural Experiment Station, or the University of Connecticut Extension system.

C. General

1. Do not obstruct roads, driveways, sidewalks, gutters and drainage ditches, swales and channels with excavated material

2. Avoid damage to utilities, buildings and private property

3. Avoid damage to historic brick, cobbles, and stones

4. Do not disturb property markers

5. Immediately report damage to Engineer

D. Complete landscape work immediately as portions of Site become available, working within seasonal limitations for each kind of landscape work required. When conditions detrimental to plant growth are encountered, notify Engineer before planting.

E. Plant or install materials during normal planting seasons for each type of landscape work required.

3.04 PROTECTION OF SEEDED SLOPES

A. Protect seeded slopes against erosion with erosion netting or other methods acceptable to Engineer.

B. Spread specified mulch after completion of seeding operations to form a continuous blanket not less than 1-1/2 inches loose measurement over seeded areas.

C. Anchor mulch by spraying with asphalt emulsion at the rate of 10 to 13 gallons per 1000 square foot. Take precautions to prevent damage or staining of construction or other plantings adjacent to mulched areas.

D. Cover seeded slopes with jute matting where grade is 3:1 or greater. Roll matting down over slopes without stretching or pulling.

E. Lay matting smoothly on soil surface, burying top end of each section in narrow 6-inch trench. Leave 12-inch overlap from top roll over bottom roll. Leave 4-inch overlap over adjacent section.

F. Staple outside edges and overlaps at 36-inch intervals.

G. Lightly dress slopes with topsoil to ensure close contact between matting and soil.

H. In ditches, unroll matting in direction of flow. Overlap ends of strips 6 inches with upstream section on top.

3.05 PLANTING OF SHRUBS AND TREES

A. Perform planting within the planting season when weather and soil conditions are suitable, and in accordance with local conditions. Do not install plants in topsoil that is in a muddy or frozen condition.

B. Prune injured roots or branches to make clean-cut ends prior to planting, utilizing clean, sharp tools, removing only injured or diseased branching.

C. Remove planting containers, baskets, and non-biodegradable materials from root balls during planting. Cut natural fiber burlap from around the trunk of trees and folded down against the root ball prior to backfilling.

D. Position trees and shrubs at intended locations shown on the Drawings and obtain Engineer's approval prior to excavating pits, making necessary adjustments as directed.

E. Dig planting pits with level bottoms, with the width twice the diameter of root ball. Rest root ball on undisturbed grade. Backfill each plant pit in layers with thoroughly, mixed prepared soil.

F. Fill prepared soil around ball of plant halfway, and insert plant tablets. Complete backfill, and water thoroughly.

G. Contractor will provide post-planting soil covers around the bases of trees and shrubs, such as bark mulch or straw. Mulch will be no greater than 3" deep. Mulch will not be applied within 6" of tree trunks or 3" of shrub trunks.

3.06 REPAIR/RESTORATION

A. Restore pavement, sidewalks, and walkways, grassed areas and planted areas damaged during execution of Work of this section as directed by the Engineer.

B. Repair grassed areas disturbed during performance of the Work. Where existing topsoil remains, provide seed to re-establish grass. Provide additional topsoil where necessary.

C. Recondition existing lawn areas damaged during prosecution of the Work and existing lawn areas where minor re-grading is required.

D. Provide fertilizer, seed, or sod, and soil amendments as specified for new lawns and as required, to provide a satisfactorily reconditioned lawn. Provide new topsoil as required to fill low spots and meet new finish grades.

E. Cultivate bare and compacted areas thoroughly to provide a satisfactory planting bed.

F. Remove diseased and unsatisfactory lawn areas. Do not bury into soil. Remove topsoil containing foreign materials resulting from prosecution of the Work.

G. Water newly planted areas and keep moist until new grass is established.

3.07 FIELD QUALITY CONTROL

A. Provide in accordance with Division 01 General Requirements.

B. Site/Field Tests and Inspections

1. Landscape work to be inspected and approved prior to completion of the Work.

2. Replace rejected Work, and continue specified maintenance until re-inspected by Engineer and accepted. Remove rejected plants and materials promptly from Site.

3.08 CLEANING

A. Keep pavement, sidewalks, and walkways clean. Maintain protection during installation and maintenance periods.

3.09 CLOSEOUT ACTIVITIES

A. Provide in accordance with Division 01 General Requirements.

3.10 MAINTENANCE

A. Provide maintenance of grass seeded areas immediately after planting.

B. Maintain grass by watering, fertilizing, weeding, mowing, trimming, and other operations such as rolling, re-grading, and replanting as required to establish smooth, acceptable lawn areas free of eroded or bare areas.

C. Maintain grassed areas to establish acceptable lawn areas until final completion, or for a minimum of 60 days after substantial completion, whichever is longer.

D. If seeded in the fall season and full 60 days of maintenance is not provided, or if not considered acceptable at that time, continue maintenance during the following spring season until acceptable lawn areas are established.

E. Maintain trees and shrubs until final completion.

END OF SECTION

SECTION 33 11 00

WATER DISTRIBUTION PIPING

PART 1 – GENERAL

1.01 RELATED DOCUMENTS

A. Drawings and general provisions of the Contract, including General and Supplementary Conditions and Division 01 Specification Sections, apply to this Section.

1.02 SUMMARY

A. Section Includes:

1. Furnish and construct copper tubing and appurtenances complete and in place including, but not limited to:

a. Copper tubing

b. Connections to other work

c. Jointing and jointing materials

d. Buried warning and identification tape

e. Insulation

f. Stop tapped

g. Curb box and curb stop

h. Testing

i. Disinfection

1.03 REFERENCES

A. AWWA C651: Disinfecting Water Mains

B. NFPA 25: Standard for the Inspection, Testing, and Maintenance of Water-Based Fire Protection Systems

1.04 QUALITY ASSURANCE

A. Manufacturer's Recommendations: The Contractor shall submit for approval the manufacturer's printed recommendations for the storage, protection, handling, and installation of the copper pipe, and appurtenances which shall be strictly adhered to by the Contractor.

B. Certificate of Compliance: Each shipment of pipe and appurtenances shall be accompanied with the manufacturer's notarized certificate certifying conformance with all requirements of the specifications.

1.05 MANUFACTURER'S REPRESENTATIVE

A. The Contractor shall furnish at no additional expense to the Owner the services of the pipe manufacturer's representatives for instruction of the Contractor personnel who will be installing the pipe. The instruction shall include proper handling, installation and jointing and other construction areas and shall be for such lengths of time required to fully familiarize the Contractor's personnel with the proper techniques.

PART 2 – PRODUCTS

A. 2-inch Type K copper tubing shall be connected to the existing water main.

B. Corporation stop and appurtenances shall be in compliance with the Drawings and all applicable requirements by the State. Contractor shall coordinate with Connecticut Water for service connection.

2.02 GATE VALVES

A. Resilient seated gate valves shall meet AWWA C-509. Valves shall be iron body, bronze-mounted, non-rising stem, suitable for use in approximately level setting on buried water distribution pipelines. Valves shall be rated for a minimum 250 psi working pressure. All valves shall OPEN RIGHT and have mechanical joints.

B. Gate valves shall be as manufactured by Kennedy (Ken Seal), Mueller, or other manufacturer acceptable to Providence Water.

2.03 VALVE BOXES AND COVERS

A. Cast iron valve boxes shall be three piece adjustable style slip type.

B. Covers shall be cast iron with the word "WATER" imprinted thereon. The boxes and covers shall be compatible with the valves to which they attach.

2.04 JOINT RESTRAINT

A. Restraining devices shall be used for restraining the hydrants to valves and valves to the main.

B. Restraining devices and T-bolts are to be manufactured from high quality ductile iron, meeting ASTM A536, Grade 65-45-12. Clamping bolts and nuts are to be manufactured from Cor-Ten Steel.

C. The restraining devices are to be as manufactured by Star National Products or an equal as approved by the Engineer.

PART 3 – EXECUTION

3.01 PIPE INSTALLATION

A. General:

1. All pipe and accessories shall be carefully inspected by the Contractor for defects before installation, and all defects, unsound, or damaged materials shall be rejected.

2. The Owner will make such additional inspections as he deems necessary, and the Contractor shall furnish all necessary assistance for such inspection.

3. Proper implements, tools, and facilities satisfactory to the Owner shall be provided by the Contractor for the proper and satisfactory execution of the work.

B. Pipe, accessories and appurtenances shall be new and unused and shall be of the types and materials specified as indicated or as directed.

C. The interior of pipe and fittings shall be thoroughly cleaned of foreign matter before being installed and shall be kept clean during all operations.

D. Pipelines shall be constructed in dry trenches and shall not be laid when the conditions of a trench or the weather is unsuitable for such work.

E. The trench bottom and bedding shall be shaped and compacted to give substantially uniform unyielding circumferential support to the lower fourth of the full length of each pipe.

F. Holes for the bells shall be excavated so that after placement the pipe and coupling receive uniform bearing pressure from the trench bottom.

G. Each pipe shall be laid to the line and grade and in such a manner as to form a close concentric joint with the adjoining pipe and to prevent sudden offsets of the flow line.

H. As the work progresses, the interior and exterior of the pipes and couplings shall be cleaned of all dirt and superfluous materials of every description.

I. When required to keep interior of pipe clean, a suitable drag shall be kept in the pipe and pulled forward past each joint immediately.

J. At times when work is not in progress, open ends of pipe and fittings shall be securely closed so that no trench water, earth, or other substance will enter the pipe or fitting.

K. Any pipe that has been disturbed after laying shall be taken up and relaid.

L. All materials found to be defective during the progress of the work will be rejected by the Owner, and the Contractor shall promptly remove such defective material from the site of the work and replaced with new material at no additional expense to the Owner.

M. The Contractor shall be responsible for the safe storage and proper handling of all materials.

N. No shims or mounds of earth shall be used to raise the pipe to grade.

O. All pipe shall be maintained accurately to the required line and grade.

P. No pipe shall be covered until the joints have been inspected.

Q. The pipeline shall not be used to convey trench drainage during construction.

R. Pipes shall be protected at all times during construction against flotation: they shall be thoroughly secured, properly supported and bedded to prevent settlement or disturbance. Compaction of bedding and backfill material shall be in strict accordance with Section 310000, Earthwork.

S. Bends, crosses, tees, caps, plugs, valves and other appurtenances shall be strapped and clamped where indicated and/or as directed. Steel bars, rods and plates shall be of structural steel. Straps, bridle rods, clamps, anchors and such other parts shall be provided to the details as directed and as approved. After installation all parts of the strapping and clamping devices shall be given two heavy coats of an approved coal-tar base protective coating.

T. Piping installed on a curved alignment shall have joint deflections in accordance with the manufacturer's recommendations.

3.02 Equipment General:

A. All hydrants, valves, and accessories shall be carefully inspected by the Contractor for defects before installation, and all defective, unsound, or damaged materials shall be rejected.

B. The Engineer will make such additional inspections as he deems necessary, and the Contractor shall furnish all necessary assistance for such inspection.

C. Proper implements, tools, and facilities satisfactory to the Engineer shall be provided by the Contractor for the proper and satisfactory execution of the work.

D. Hydrants, valves and appurtenances shall be new and unused and shall be of the types and materials specified as indicated or as directed.

E. The interior of hydrants and valves shall be thoroughly cleaned of foreign matter before being lowered into the trench and shall be kept clean during laying operations.

F. Hydrants and valves shall be constructed in dry trenches and shall not be laid when the conditions of the trench or the weather is unsuitable for such work.

G. Hydrants and valves shall be laid to the line and grade and in such a manner as to form a close concentric joint with the adjoining pipe and to prevent sudden offsets of the flow line.

H. At times when work is not in progress, open ends of hydrants and valves shall be securely closed so that no trench water, earth, or other substance will enter.

I. Any hydrant or valve that has been disturbed after laying shall be taken up and re-laid.

J. All material found to be defective during the progress of the work will be rejected by the Owner, and the Contractor shall promptly remove such defective material from the site of the work and replace with new material at no additional expense to the Owner.

K. The Contractor shall be responsible for the safe storage and proper handling of all material.

L. No shims or mounds of earth shall be used to raise the equipment to grade.

M. No valve shall be covered until the joints have been inspected.

N. Installed materials shall be protected at all times during construction against flotation: they shall be thoroughly secured, properly supported and bedded to prevent settlement or disturbance. Compaction of bedding and backfill material shall be by mechanical means and achieve a minimum 95 % density.

O. Hydrants and hydrant valves shall be strapped and clamped where indicated and/or as directed. Straps, bridle rods, clamps, anchors, and such other parts shall be provided to the details as directed and as approved. After installation all parts of the strapping and clamping devices shall be given two heavy coats of an approved coal-tar base protective coating.

3.03 Valve and Joint Restraints:

A. Valves and joint restraints shall be installed where indicated or as directed by the Engineer and shall be installed according to the manufacturer's recommended procedures.

3.04 Setting Valves and Valve Boxes:

A. Valves shall be set in the pipe lines as directed. Blocking or supports of a permanent nature shall be placed under each valve to insure against settlement.

B. Each valve shall be tightly closed before being placed in the line and shall remain so until the joints on each side are completely tightened.

C. Valve boxes shall be set for all valves. They shall be carefully fitted together and to the valve and securely held during backfilling. The bedding material around them shall thoroughly tamped in place and the box cover set to the finished grade.

3.05 LEAKAGE TESTING

A. Tests for leakage shall be conducted on all portions of the completed pipeline work.

B. The Engineer and water department shall be notified at least ten (10) days in advance of the date and location of the testing in order to witness the tests.

C. All air shall be released and the pipeline completely filled with water and the internal pressure shall be built up to 150 psi for domestic supply lines and 200 psi for fire supply lines and so maintained for the full period of the tests.

D. All leaks in the joints of pipelines shall be stopped: and cracked or defective pipe, pipe fittings or accessories shall be removed and replaced by the Contractor at no additional expense to the Owner.

E. Allowable leakage for Fire Supply: Allowable leakage at 200 psi test pressure shall not exceed 2 quarts per hour per 100 gaskets or joints, irrespective of pipe diameter. The amount of allowable leakage shall be permitted to be increased by 1 fluid ounce per inch valve diameter per hour for each metal-seated valve isolating the test section. If dry barrel hydrants are tested with the main valve open so the hydrants are under pressure, an additional 5 fluid ounces of leakage shall be permitted for each hydrant.

F. Test shall begin after all identifiable or visible leaks have been corrected and last a minimum of two (2) hours.

G. The Contractor shall make repairs and/or replacement work on any section which fails the test and perform all retesting, as may be required, at no additional expense to the Owner, until the required conditions are met.

H. The Contractor shall furnish to the Engineer, water department, and Fire Marshal, notarized test reports by an independent testing laboratory which show compliance of all the materials furnished to the requirements specified herein. The test reports shall indicate results and methods employed. Fire supply line

tests shall be reported on the attached Contractor's Material and Test Certificate for Underground Piping in accordance with NFPA 13.

3.06 DISINFECTION OF WATER PIPELINE

A. All water pipe work shall be disinfected prior to connection to the Brockton Water system. Methods, materials, and procedures for performing the disinfection shall be provided as part of the work of this section of the Specifications.

B. Pipelines shall be flushed before disinfection. Liquid chlorine shall be introduced into the main. Disinfection shall be provided in accordance with the requirements prescribed by the AWWA Standard C651 latest revision, and as approved by the Engineer. The amount of chlorine applied shall be such as to produce a dosage of not less than 50 parts per million. The chlorinating material shall be introduced into the water lines and distribution system in a manner approved by the Engineer. All valves in the lines being disinfected shall be opened and closed several times during the contact period. The chlorine solution shall remain in the pipeline for a minimum of 36 hours.

C. Samples of water will then be taken by the Engineer no sooner than 24 hours after flushing all chlorine from the system, and laboratory analysis will be made for the Engineer to determine effectiveness of treatment. If the samples tested fail to meet laboratory standards as determined by the Engineer, the pipelines shall be repeatedly treated by the Contractor at no additional charge to the Owner, until the desired results are obtained.

D. Discharge means of chlorinated water shall comply with all Federal, State, and local standards.

END OF SECTION

Contractor's Material and Test Certificate for Underground Piping

PROCEDURE

Upon completion of work, inspection and tests shall be made by the contractor's representative and witnessed by an owner's representative. All defects shall be corrected and system left in service before contractor's personnel finally leave the job.

A certificate shall be filled out and signed by both representatives. Copies shall be prepared for approving authorities, owners, and contractor. It is understood the owner's representative's signature in no way prejudices any claim against contractor for faulty material, poor workmanship, or failure to comply with approving authority's requirements or local ordinances.

Property name		Date
Property address		
Plans	Accepted by approving authorities (names)	
	Address	
	Installation conforms to accepted plans	☐ Yes ☐ No
	Equipment used is approved If no, state deviations	☐ Yes ☐ No
	Has person in charge of fire equipment been instructed as to location of control valves and care and maintenance of this new equipment? If no, explain	☐ Yes ☐ No
	Have copies of appropriate instructions and care and maintenance charts been left on premises? If no, explain	☐ Yes ☐ No
Location	Supplies buildings	
Underground pipes and joints	Pipe types and class	Type joint
	Pipe conforms to _____ standard Fittings conform to _____ standard If no, explain	☐ Yes ☐ No ☐ Yes ☐ No
	Joints needed anchorage clamped, strapped, or blocked in accordance with _____ standard If no, explain	☐ Yes ☐ No
Test description	Flushing: Flow the required rate until water is clear as indicated by no collection of foreign material in burlap bags at outlets such as hydrants and blow-offs. Flush at flows not less than 390 gpm (1476 L/min) for 4-in. pipe, 880 gpm (3331 L/min) for 6-in. pipe, 1560 gpm (5905 L/min) for 8-in. pipe, 2440 gpm (9235 L/min) for 10-in. pipe, and 3520 gpm (13,323 L/min) for 12-in. pipe. When supply cannot produce stipulated flow rates, obtain maximum available. Hydrostatic: Hydrostatic tests shall be made at not less than 200 psi (13.8 bar) for 2 hours or 50 psi (3.4 bar) above static pressure in excess of 150 psi (10.3 bar) for 2 hours. Leakage: New pipe laid with rubber gasketed joints shall, if the workmanship is satisfactory, have little or no leakage at the joints. The amount of leakage at the joints shall not exceed 2 quarts per hour (1.89 L/hr) per 100 joints irrespective of pipe diameter. The leakage shall be distributed over all joints. If such leakage occurs at a few joints, the installation shall be considered unsatisfactory and necessary repairs made. The amount of allowable leakage specified above can be increased by 1 fluid ounce per inch valve diameter per hr. (30 mL/25 mm/hr) for each metal seated valve isolating the test section. If dry barrel hydrants are tested with the main valve open so the hydrants are under pressure, an additional 5 ounces per minute (150 mL/min) leakage is permitted for each hydrant.	
Flushing tests	New underground piping flushed according to _____ standard by (company) If no, explain	☐ Yes ☐ No
	How flushing flow was obtained ☐ Public water ☐ Tank or reservoir ☐ Fire pump	Through what type opening ☐ Hydrant butt ☐ Open pipe
	Lead-ins flushed according to _____ standard by (company) If no, explain	☐ Yes ☐ No
	How flushing flow was obtained ☐ Public water ☐ Tank or reservoir ☐ Fire pump	Through what type opening ☐ Y connection to flange and spigot ☐ Open pipe

Hydrostatic test	All new underground piping hydrostatically tested at _____ psi for _____ hours		Joints covered ☐ Yes ☐ No
Leakage test	Total amount of leakage measured _____ gallons _____ hours		
	Allowable leakage _____ gallons _____ hours		
Hydrants	Number installed	Type and make	All operate satisfactorily ☐ Yes ☐ No
Control valves	Water control valves left wide open If no, state reason		☐ Yes ☐ No
	Hose threads of fire department connections and hydrants interchangeable with those of fire department answering alarm		☐ Yes ☐ No
Remarks	Date left in service		
Signatures	Name of installing contractor		
	Tests witnessed by		
	For property owner (signed)	Title	Date
	For installing contractor (signed)	Title	Date
Additional explanation and notes			

SECTION 33 99 00

PRECAST CONCRETE STRUCTURES

PART 1 – GENERAL

1.01 SUMMARY

A. Section Includes

1. Provide the work necessary to design, fabricate, furnish and deliver the specified precast concrete catch basin units including fittings, castings, specialties, and accessories in accordance with this Section, applicable reference standards listed in Article 1.03., and the Drawings.

1.02 PRICE AND PAYMENT PROCEDURES

A. Measurement and payment requirements: per Division 01 General Requirements.

1.03 REFERENCES

A. Reference Standards

1. CTDOT Standard Specifications and Supplements, except for Compensation sections
2. CTDOT Construction Details
3. AASHTO M 105: Standard Specification For Gray Iron Castings
4. ASTM A48: Gray Iron Casting
5. ASTM C32: Brick
6. ASTM C92: Connections
7. ASTM C139: Concrete Masonry Units for Construction of Catch Basins & Manholes
8. ASTM C144: Aggregate for Masonry Mortar
9. ASTM C150: Portland Cement
10. ASTM C207: Hydrated Lime for Masonry Purposes
11. ASTM C 270, Type S: Mortar
12. ASTM C478: Precast Reinforced Concrete Manhole Sections

13. ASTM A615: Deformed and Plain Carbon-Steel Bars for Concrete Reinforcement

14. ASTM C923: Resilient Connectors between RC Manhole Structures and Pipes

15. ASTM C990: Joints for Concrete Pipe, Manholes, and Precast Box Sections Using Preformed Flexible Joint Sealants

1.04 ADMINISTRATIVE REQUIREMENTS

A. Coordination, Sequencing, and Scheduling: per Division 01 General Requirements.

1.05 SUBMITTALS

A. Submit in accordance with the Division 01 General Requirements.

1. Product Data

2. Certificates

   a. Manufacturer's notarized certificate certifying conformance with the Specifications to accompany shipments.

3. Design Data/Submittals

   a. Details of catch basin unit, joint details, construction details, tolerances

4. Field Quality Control Submittals

   a. test results

   b. logs of inspection and testing: concrete compression test results for the -28 day strength shall be submitted by the Manufacturer to the Engineer.

1.06 QUALITY ASSURANCE

A. Provide in accordance with Division 01 General Requirements.

1.07 DELIVERY, STORAGE, AND HANDLING

A. Provide in accordance with Division 01 General Requirements.

B. Packing, Shipping, Handling, and Unloading

1. Do not ship catch basins for at least 5 days after manufacture when cured by subjecting to saturated steam at a temperature between 100 and 150

degrees F for a period of not less than 8 hours, or for additional time required meet the Specification.

2. Handle and place concrete catch basin units in accordance with manufacturer's written rigging instructions

3. Provide necessary slings, straps, and other devices for the safe and satisfactory handling and support of the catch basin sections during lifting, installing, and final positioning using lifting holes

1.08 SITE CONDITIONS

A. Existing Conditions: per Division 01 General Requirements.

PART 2 – PRODUCTS

2.01 PRE CAST CATCH BASINS

A. Provide precast structures conforming to ASTM C478 and as shown on the Drawings capable of supporting H-20 loading.

1. Include crystalline waterproofing additive in concrete prior to casting of riser section.

2. Wall sections: minimum 5 inches thick.

3. Cone sections: precast sections of similar manufacture of varying heights to meet construction conditions.

4. Cast openings for pipe and materials to be embedded in the walls of the structures during manufacture.

5. Lift holes: 2 maximum, cast or drilled in any section, provided with suitable rubber or concrete stopper or other approved device for plugging the holes.

6. Clearly mark date of manufacture and name or trademark of manufacturer on inside of the riser structure.

7. Precast Bases and Top Slabs: same construction as the precast riser sections of dimensions shown on the Drawings.

8. Precast concrete base and first riser: monolithic.

9. Anti-floatation slab: ASTM C139 precast monolithic base unit or cast in place based on manufacturer's recommendation and as approved.

2.02 MASONRY MATERIAL

A. Brick: ASTM C32; sound, hard, uniformly burned brick in regular shape and size. Provide Grade MS for applications other than inverts and shelves.

B. Concrete Masonry Units: ASTM C139.

C. Mortar: one part Type II Portland cement ASTM C150, two parts sand ASTM C144 well graded with no grain larger than will pass a Number 8 sieve, and 20 percent hydrated lime ASTM C207 (Type S).

2.03 FRAMES AND GRATES

A. Types and sizes: as shown on the Drawings.

2.04 CATCH BASIN HOOD AND GREASE TRAP

A. Type/Quality Level: cast iron and mounted per manufacturer specifications.

2.05 JOINT SEALANT

A. Type: ASTM C990 section 6.2.1, Butyl rubber sealant, all-weather, pre-formed, in flexible rope form or approved equal.

2.06 MATERIAL FOR PIPE TO STRUCTURE CONNECTIONS

A. Compression Type: ASTM C923, single rubber gasket, constructed solely of synthetic or natural rubber.

A. Type/Quality Level: Boot Type, ASTM C92, rubber gasket or boot, metal expansion ring and double metal take-up clamps or Press-Boot by Press-Seal Gasket Corp., watertight, expandable pipe sleeve with adjustable expansion ring or approved equal.

B. Mortar: as specified in Paragraph 2.02.C.

PART 3 – EXECUTION

3.01 GENERAL

A. All precast concrete units shall be stored, handled, protected and delivered by the manufacturer to be installed and unloaded by the Contractor. The manufacturer shall be present to verify that all supplied units are installed in accordance with the printed recommendations of the manufacturer and in a manner to prevent overstressing, marring or damaging of the units. The manufacturer shall provide a written affidavit that they witnessed and approved the installation means and methods according to the manufactures recommendations

B. The work shall be performed by workers experienced in this type of work.

C. In addition to all other requirements specified, all precast concrete units shall be adequately designed and fabricated by the Manufacturer to safely withstand all handling stresses without damage and to adequately and safely support all loads imposed by the work of other trades which might affect construction

3.02 INSTALLATION

A. Preparation: To avoid damage and stress concentration, lifting devices shall be designed by the Manufacturer for 100 percent impact loading and shall be sufficiently ductile to insure obvious deformation before failure.

B. Place bases and structures to the lines, grades, dimensions shown on the Drawings and as directed, with frames, grates, and appurtenances on compacted foundation material of uniform density as shown on the Drawings.

1. Place so bottom of structure is plumb and pipe inverts are at proper elevations. Position tops of structures flush with finished grade.

2. Accurately locate each structure and set accurate templates to required line and grade as shown on the Drawings. Remove and rebuild structures incorrectly and improperly located, oriented or aligned, at no additional cost to Owner.

3. Establish sufficient length of proposed curb or edge of pavement adjacent to the structure prior to construction of the drain inlet and/or catch basin to ensure that the structure is correctly located and oriented.

C. Place structure bases as shown on the Drawings.

1. Place foundation course on firm soil of uniform bearing. If soil below the foundation course is classified as unsuitable, remove and replace with per Section 310000 Earthwork up to the bottom elevation of the foundation course.

D. Backill per Section 310000 Earthwork. Backfill with Controlled Density Fill when installed with less than 18 inches horizontal clearance from adjacent structures and/or pipe or as directed.

E. Seal joints between precast sections with watertight, shiplap-type seal per manufacturer's instructions. Point joints inside and out with butyl caulk or waterproofing cement.

1. Grout exterior joints between precast sections with waterproof cement or other approved product prior to backfill or completion if above grade.

F. Frames and grates

1. Install types and sizes shown on the Drawings.

2. Bed frames in mortar specified in Paragraph 2.02.C and set accurately to the specified alignment and grade. In areas to be paved, set frames using 4 points of reference, set 90 degrees apart, to ensure accurate setting to proposed final grade.

3. Set to final grade as shown on the Drawing, 1/2 inch below pavement grade. Provide adequate temporary covers to prevent accidental entry until final placement of frame and grate is made.

4. Use two rings of 1-inch diameter butyl rubber sealant between frame and chimney joints. Provide downward force to frame to compress the joint, provide a watertight seal, and prevent future settlement. Point compressed joint with butyl rubber caulk sealant.

5. Set frames and covers to final grade only after pavement base course has been applied.

G. Watertight pipe connections to structures

1. Compression or boot type installed per manufacturer instructions.

2. Mortar as specified in Paragraph 2.02.C.

a. Water for mixing shall be clean and not contain salts, oil, alkali, organic matter or deleterious materials.

b. Hand mixing of mortar will be allowed only when the amount of mortar required renders machine mixing undesirable and not practicable.

c. Do not use mortar after more than 1-1/2 hours after mixing and do not retemper. Properly dispose of unused mortar.

3.03 PATCHING

A. Where patching is permitted by the Owner and Engineer, the patches shall be made using the same material as used in the unit being patched and using a 2-part epoxy compound of a type to produce a proper bonding of the patch to the units.

1. Patching required due to damage during offloading staging or installation shall be responsibility of the Contractor.

2. Patching required due to delivery shall be the responsibility of the Manufacturer and approved by the Manufacturer and Town Engineer.

B. Patching of imperfections at the plant by the Manufacturer shall require the Owner's and Engineer's approval before the unit is shipped from the manufacturer's plant.

3.04 CURING

A. Units shall be cured by suitable heating moisture or stream curing until the required strength for release or handling is obtained. During this time, no surface shall be exposed to direct sunlight or direct wind.

3.05 MARKING

A. Each precast concrete unit shall be marked in accordance with the marking and identifying procedure designated on the approved shop drawings and setting plans

3.06 FIELD QUALITY CONTROL

A. Provide in accordance with Division 01 General Requirements.

B. Subject pipe to thorough inspection and tests in accordance with the methods prescribed by, and acceptance or rejections based on, applicable ASTM specifications. Pipes may be rejected at Site if non-conforming or damaged regardless of prior factory acceptance.

3.07 CLOSEOUT ACTIVITIES

A. Provide in accordance with Division 01 General Requirements.

END OF SECTION